53-1

# Meissner

## "How to Build"

Signal Shifter p 93

# INSTRUCTION MANUAL

FOR BEGINNERS, ADVANCED STUDENTS, INSTRUCTORS, SERVICEMEN, HOBBYISTS, & EXPERIMENTERS

**FULLY ILLUSTRATED WITH CHARTS RADIO FORMULAE SCHEMATIC CIRCUIT DIAGRAMS AND PICTORIAL WIRING DIAGRAMS**

CONTAINING:

A WEALTH OF INFORMATION ON BASIC THEORY, DESIGN, CONSTRUCTION ON AM CIRCUITS, FM CIRCUITS, PHONO PICKUPS, AUDIO AMPLIFIERS, SPEAKERS, DISC RECORDERS; SELECTION OF TRANSFORMERS; CONSTRUCTION OF POWER SUPPLIES, TRANSMITTERS, PHOTO FLASH PACK, AND SCORES OF CIRCUIT DIAGRAMS COVERING VARIED APPLICATIONS.

PRICE $1.50 in U.S.A.

THORDARSON-MEISSNER

MANUFACTURING DIVISION, MAGUIRE INDUSTRIES, INC.

MT. CARMEL, ILLINOIS

# TABLE OF CONTENTS

## I-DATA


| | Page |
|---|---|
| Transformer Characteristics | 2 |
| Mica Capacitor and Resistor Color Code | 6 |
| Handy Radio Formulae | 7 |
| Capacity, Frequency, Inductance Chart | 123 |
| R L C Networks, Attenuator Nets | 154 |
| Voltage, Decibel, and Power Chart | 155 |
| Color Code, Pilot Light and Conversion Chart | 158 |
| Wire Table | 159 |
| Machine Screw Chart | 159 |
| Frequency Allocations | 160 |


## II-GENERAL INFORMATION - CIRCUITS AND APPLICATIONS


| | |
|---|---|
| Introduction | 8 |
| Radio Coils | 9 |
| Frequency Modulation | 22 |
| Television Test Patterns | 29 |
| Construction, Testing and Use of Audio Amplifiers | 35 |
| Loudspeakers | 41 |
| Phonograph Pickups | 47 |


## III-CONSTRUCTION OF THORDARSON-MEISSNER KITS (By Order of Difficulty)


| | |
|---|---|
| Construction Hints | 4, 5, 160 |
| Receiver: | |
| Model 2 BK - 2 Tube Student Kit | 56 |
| Model 3 BK - 3 Tube Student Kit | 58 |
| Model T-4 EK - TRF Tuner | 121 |
| Model 10-1191A - 5 Tube AC-DC Superheterodyne | 106 |
| Model 10-1199 - 6 Tube AC-DC Kit | 124 |
| Model 8 CK - FM Receptor Kit | 60 |
| Model 6 BK - 3 Band AM Receiver | 64 |
| Transmitter: | |
| Model 2 CW - Novice Transmitter | 53 |


## IV-AVAILABLE ASSEMBLIES


| | |
|---|---|
| Model 9-1091 C - AM-FM Tuner | 68 |
| Model T-32 W 10 - Tru-Fidelity Tuner | 102 |
| Model 9-1093 AM-FM Receiver | 104 |
| Model 8 BT - AM-FM Tuner | 118 |


## V-CIRCUITS FOR THE BUILDER


| | |
|---|---|
| Power Supplies | |
| Selenium Rectifier and Low Voltage | 76 |
| Multiple Low Voltage and Dual Voltage | 77 |
| 115 V AC - 6 V DC, Photo Flash | 78 |
| Matched Plate Supplies | 79 |
| Variable DC Power Supply | 80 |
| Audio Amplifiers | |
| Paging Amplifier | 152 |
| Dual Tone Control | 156 |
| Amateur Speech Amplifier Utilizing Filter | 148 |
| 6 Watt Audio Amplifier | 81 |
| High Fidelity 10 Watt Amplifier | 144 |
| 20 Watt Audio Amplifier | 72 |
| 25 Watt Amplifier | 146 |
| 50 Watt Booster Amplifier | 150 |
| Portable Phono Recorder | 114 |
| Converters and Receivers | |
| Push Pull RF, Noise Limiter, One Tube Converter, Superregenerative | 82 |
| Cascode Tuner, IF Strip, Novice Receiver | 83 |
| 5 Tube AC TRF Receiver | 110 |
| 7 Tube AC Broadcast Receiver | 94 |
| 7 Tube Broadcast and Shortwave Receiver | 98 |
| Oscillators and Transmitters | |
| BFO, Squelch, RF Standard, Code Oscillator | 84 |
| Phono Oscillator | 128 |
| One Tube Transmitter, Clapp Oscillator, 100-1000 Watt Modulator, Radio Control Transmitter | 85 |
| 50 Watt Transmitter, Linear Amplifier | 86 |
| Complete Medium Power Transmitter | 87 |
| Test Equipment | |
| LCR Bridge, Audio Oscillator, Grid Dip Oscillator | 88 |
| Vacuum Tube Voltmeter, Square Wave Generator | 89 |
| 2 Inch Oscilloscope | 90 |
| Miscellaneous Circuits | |
| Key Click Filter, Photo Cell Relay, Metronome, Blinking Lamps, Gated Detector | 91 |
| Carrier Current Transceiver, Firing Photo Flash Tubes | 92 |
| Signal Calibrator | 140 |


## VI-MISCELLANEOUS INFORMATION


| | |
|---|---|
| De "TVI" ing Radio Transmitters ....Signal Shifter | 93 |
| Use and Operation of an Analyst | 130 |

53-1

# Meissner

## "How to Build"

# INSTRUCTION MANUAL

FOR BEGINNERS, ADVANCED STUDENTS, INSTRUCTORS, SERVICEMEN, HOBBYISTS, & EXPERIMENTERS

**FULLY ILLUSTRATED WITH CHARTS RADIO FORMULAE SCHEMATIC CIRCUIT DIAGRAMS AND PICTORIAL WIRING DIAGRAMS**

CONTAINING:

A WEALTH OF INFORMATION ON BASIC THEORY, DESIGN, CONSTRUCTION ON AM CIRCUITS, FM CIRCUITS, PHONO PICKUPS, AUDIO AMPLIFIERS, SPEAKERS, DISC RECORDERS; SELECTION OF TRANSFORMERS; CONSTRUCTION OF POWER SUPPLIES, TRANSMITTERS, PHOTO FLASH PACK, AND SCORES OF CIRCUIT DIAGRAMS COVERING VARIED APPLICATIONS.

PRICE $1.50 in U.S.A.

THORDARSON-MEISSNER

MANUFACTURING DIVISION, MAGUIRE INDUSTRIES, INC.

MT. CARMEL, ILLINOIS

Meissner

"How to Build"

# INSTRUCTION MANUAL

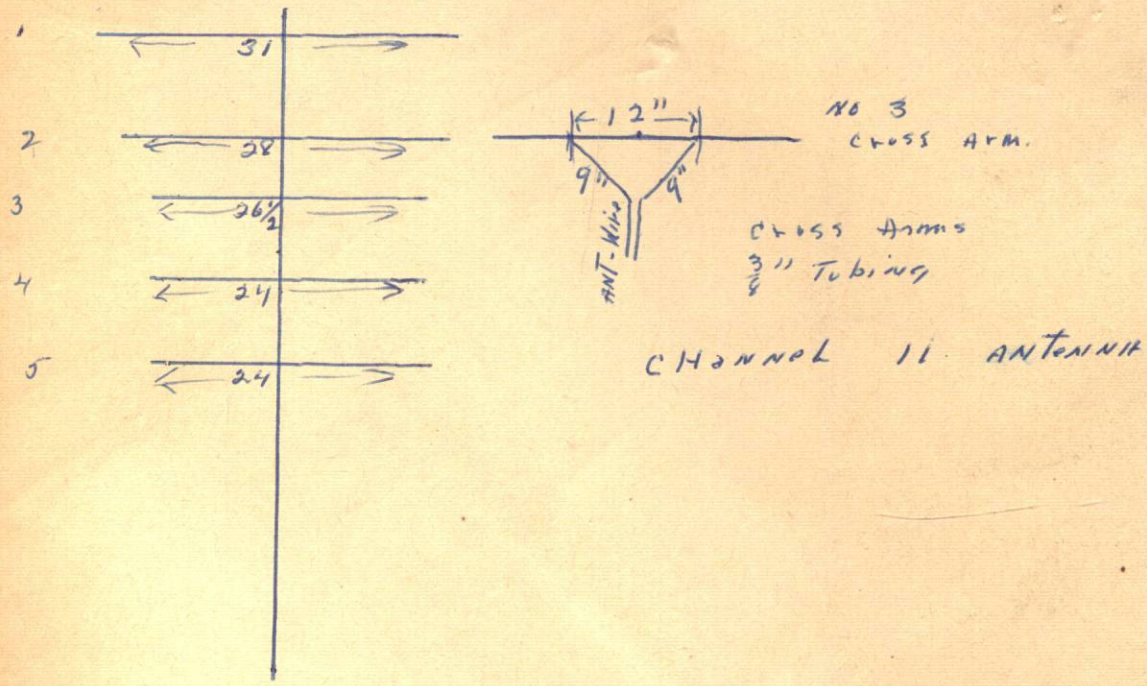


Entire Contents of this Book

*Copyright 1952*

by the

THORDARSON-MEISSNER MANUFACTURING DIVISION

Maguire Industries Incorporated

Mt. Carmel, Illinois

Reproduction, in whole or in part, without express authority of the copyright owners, is forbidden.

MAGUIRE INDUSTRIES INC

# THORDARSON-MEISSNER

MANUFACTURING DIVISIONS

*IF Transformer Characteristics*

| PART NO. | USE | FREQ. KC | IND. uH | Q | BAND WIDTH KC 2X | BAND WIDTH KC 10X | CODE |
|---|---|---|---|---|---|---|---|
| 16-5700 | Input | 175 | 8000 | 51 | 6.5 | 17.7 | 1 |
| 16-5702 | Output | 175 | 8000 | 51 | 12.2 | 32 | 1 |
| 16-3731 | Ct. Output | 175 | 8000 | 69 | 9.8 | 23.2 | 1 |
| 16-5728 | Input | 175 | 8000 | 90 | 12.5 | 30.0 | 2 |
| 16-5730 | Output | 175 | 8000 | 90 | 16.5 | 44.0 | 2 |
| 16-6649 | Input | 175 | 8000 | 46 | 6.0 | 17.1 | 3 |
| 16-6650 | Interstage | 175 | 4000 | 50 | 5.7 | 15.0 | 3 |
| 16-6651 | Output | 175 | 8000 | 46 | 11.2 | 29.5 | 3 |
| 16-5704 | Input | 262 | 2000 | 52 | 6.8 | 18.4 | 1 |
| 16-5706 | Output | 262 | 3500 | 50 | 17.9 | 46.2 | 1 |
| 16-6652 | Input | 262 | 5000 | 56 | 9.5 | 24.7 | 3 |
| 16-6653 | Interstage | 262 | 4500 | 46 | 10.4 | 27.6 | 3 |
| 16-6654 | Output | 262 | 5000 | 52 | 18.0 | 51.0 | 3 |
| 16-6679 | Output. | 262 | 5000 | 54 | 12.0 | 34.0 | 4 |
| 16-6752 | Input | 262 | | | | | 10 |
| 16-6754 | Output | 262 | | | | | 10 |
| 16-6655 | Input | 370 | 3000 | 82 | 8.4 | 24.4 | 3 |
| 16-6656 | Interstage | 370 | 2500 | 55 | 11.3 | 30.0 | 3 |
| 16-6657 | Output | 370 | 2300 | 84 | 18.8 | 47.7 | 3 |
| 16-5712 | Input | 456 | 1300 | 104 | 11.1 | 27.7 | 1 |
| 16-6133 | Interstage | 456 | 666 | 45 | 14.5 | 36.5 | 1 |
| 16-5714 | Output | 456 | 1300 | 104 | 12.3 | 37.6 | 1 |
| 16-3736 | Ct. Output | 456 | 1500 | 70 | 23.2 | 60.0 | 1 |
| 16-5740 | Input | 456 | 900 | 136 | 8.4 | 20 | 2 |
| 16-5742 | Output | 456 | 1125 | 140 | 13.8 | 38 | 2 |
| 16-5782 | Input | 456 | | | | | |
| 16-5784 | Output | 456 | | | | | |
| 16-6658 | Input | 456 | 1400 | 63 | 18.8 | 46.6 | 3 |
| 16-6659 | Interstage | 456 | 1400 | 46 | 12.5 | 33.0 | 3 |
| 16-6660 | Output | 456 | 1400 | 63 | 17.5 | 50.5 | 3 |
| 16-6661 | Input | 456 | 1400 | 56 | 22.4 | 61.5 | 3 |
| 16-6662 | Input | 456 | 1300 | 92 | 11.2 | 30.0 | 3 |
| 16-6663 | Output | 456 | 1300 | 92 | 15.0 | 41.0 | 3 |
| 16-6666 | Input | 456 | 1550 | 77 | 14.1 | 37.5 | 3 |
| 16-6667 | Output | 456 | 1250 | 78 | 18.0 | 49.5 | 3 |
| 16-6668 | Input | 456 | 2150 | 67 | 22.5 | 54.3 | 2 |
| 16-6669 | Output | 456 | 2150 | 67 | 22.5 | 58.0 | 2 |
| 16-6670 | Output | 456 | 1400 | 63 | 17.5 | 50.5 | 2 |
| 16-6678 | Input | 456 | 1400 | 70 | 16.6 | 41.1 | 2 |
| 16-6678 | Output | 456 | 1400 | 70 | 18.8 | 52.1 | 2 |
| 16-6670 | Output | 456 | | | | | 4 |
| 17-3486 | N. B. Disc. | 456 | peak-peak Linear 15 KC | | | | 8 |
| 16-6758 | Input or Output | 456 | | | | | 10 |
| 16-6770 | Output | 456 | | | | | 10 |
| 17-7400 | Input | 456 | | | | | 9 |
| 17-7412 | Output | 456 | | | | | 9 |
| 17-7510 | Input-Interstage | 456 | Perm. Tuned | | | | 9 |
| 17-7514 | Output | 456 | Perm. Tuned | | | | 9 |
| 16-8091 | Input | 1500 | 123 | 110 | 12.8 | 32.0 | 2 |
| 16-8099 | Output | 1500 | 123 | 110 | 17.00 | 55.1 | |
| 16-6665 | FM IF | 10.7 MC | | | 350 | | 5 |
| 17-3484 | Discriminator | 10.7 MC | | | peak-peak | 400KC | 7 |
| 17-3487 | Ratio Det. | 10.7 MC | | | peak-peak | 400KC | 7 |
| 17-3488 | Ratio Det. | 10.7 MC | | | | | 7 |
| 16-6675 | Input | 455 | 656 | 75 | 14.4 | 37.5 | 6 |
| | Output | 455 | 656 | 75 | 17.5 | 47.0 | |
| | | 10.7 MC | | | 244 | 666.0 | |
| 17-9373 | Phono-Oscilator | | | | | | |
| 17-6753 | Beat Freq. Osc. | | | | | | |
| 17-6074 | Beat Freq. Osc. | | | | | | |

CODE--These Transformers Found in the MEISSNER Catalogue Under Title Given Opposite CODE Number:

1. STANDARD GENERAL REPLACEMENT
2. HI Q IRON CORE STANDARD
3. AIR CORE PLASTIC
4. TWEET FILTER OUTPUT
5. FM
6. FM AM COMPOSITE
7. 10.7 MC. IF, DISC AND RATIO DET.
8. NARROW BAND DISCRIMINATOR COIL
9. "BAND EXPANDING"
10. 3/4" PERMABILITY TUNED LINE.

## SELECTED POWER TRANSFORMERS, CHOKES, AUDIO TRANSFORMERS ETC.

| PART NO. | USE | SEC. #1 VOLT | CURRENT | NOTE | CODE |
|---|---|---|---|---|---|
| T-24R00U | Power Trans. | 240-0-240 | 40MA | 5V-2A, 6.3V ct-2A | 1 |
| T-22R02 | Power Trans. | 300-0-300 | 70MA | 5V-2A, 6.3V ct-3A | 1 |
| T-22R05 | Power Trans. | 300-0-300 | 120MA | 5V-3A, 6.3V ct-5A | 1 |
| T-24R02U | Power Trans. | 350-0-350 | 70MA | 5V-2A, 6.3V ct-2.5A | 1 |
| TS-24R05 | Power Trans. | 350-0-350 | 120MA | 5V-3A, 6.3V ct-4.7A | 1 |
| TS-24R06 | Power Trans. | 375-0-375 | 150MA | 5V-3A, 6.3V ct-4.7A | 1 |
| T-22R35 | Power Trans. | 400-0-400 | 340MA | 5V-6A, 6.3V ct-7A | 1 |
| T-22R36 | Power Trans. | 600-0-600 | 200MA | 5V-3A, 6.3V ct-5A | 1 |
| T-21P93 | Plate Trans. | 1075-0-1075<br>500-0-500 | 95MA<br>125MA | | 2 |
| T-21P83 | Plate Trans. | 1560-0-1560<br>1250-0-1250 | 200MA | | 2 |
| T-21P79 | Plate Trans. | 1875-0-1875<br>1560-0-1560 | 400MA | | 2 |
| T-21P96 | Plate Trans. | Lo 2450-0-2450<br>Hi 3000-0-3000 | 500MA | | 3 |
| T-21F02 | Filament Trans. | 2.5V.ct. | 10 AMP | 7,500 V- INS. | 4 |
| T-21F03 | Filament Trans. | 5V. ct. | 3 AMP | 1,600 V. INS. | 4 |
| T-21F20 | Filament Trans. | 5V. ct. | 15 AMP | 10,000 V. INS. | 4 |
| T-21F07 | Filament Trans. | 5V. ct. | 21 AMP | 1,600 V. INS. | 4 |
| T-21F10 | Filament Trans. | 6.3V. ct. | 3 AMP | 1,600 V. INS. | 4 |
| T-21F12 | Filament Trans. | 6.3V. ct. | 10 AMP | 1,600 V. INS. | 4 |
| T-21F16 | Filament Trans. | 7.5V. ct. | 8 AMP | 1,600 V. INS. | 4 |
| T-21F19 | Filament Trans. | 10V. ct. or<br>11V. ct. | 12 AMP<br>11 AMP | 1,600 V. INS. | 4 |
| T-20C51 | Choke | | 5/25 MA | 15/35 hy. | 5 |
| T-20C53 | Choke | | 60/100 MA | 8/17 hy. | 5 |
| T-20C64 | Choke | | 100/150 MA | 3/7 hy. | 5 |
| T-20C55 | Choke | | 150/300 MA | 2/9 hy. | 5 |
| T-20C49 | Choke | | 200/250 MA | 4/5 hy. | 5 |
| T-20C56 | Choke | | 250/375 MA | 4/8 hy. | 5 |
| T-20A00 | Input 1:10 | | | 500/600 ct. ohms. To 60000 CT<br>200/250 ct. ohms. To 20000 CT<br>35/50 ct. ohms. To 20000 CT | 6 |
| T-20A02 | Input 1:20 | | | 500/600 ct. ohms. To 240000 CT<br>200/25 ct. ohms. To 80000 CT<br>35/50 ct. ohms. To 80000 CT | 6 |
| T-20A06 | Input 1:1<br>Hum Bucking | | | 500/600 ct. ohms. To 500/600 CT<br>200/250 ct. ohms. To 200/250 CT<br>35/50 ct. ohms. To 500/600 CT | |
| T-20A16 | Interstage 1:2 | | | 7000 ohms. To 40,000 CT | 7 |
| T-20A18 | Interstage 1:3 | | | 7000 ohms. To 40,000 CT<br>15000 ohms. To 40,000 CT | 7 |
| T-20A19 | Interstage 1:3 | | | 10K-20K ct. ohms. To 90K-180K ct. | 7 |
| T-20D77 | Driver 2.5:1 | | 30 MA. Pri. | ie: 1-6C5 To 2-6F6 $AB_2$ | 8 |
| T-20D79 | Driver 5.2:1 | | 30 MA. Pri. | ie: Triode 6V6 To 2-6L6 $AB_2$ | 8 |
| T-20D80 | Driver 3.2:1<br>2:1 | | 100 MA. Pri. | ie: PP 6L6 To 2-100TH B | 8 |
| T-20D84 | Driver Ratio<br>1/.75-3 | | 20 WATT<br>capacity | 500-Line To Class B Grid | 8 |
| T-21M52 | Modulation | | 10 WATT<br>Audio | Pri: 10K CT. SEC: 4.5, 3.75, 3.K<br>ie: 6N7, 2-6V6, 2-6AQ5 etc. | 9 |
| T-21M54 | Modulation | | 25 WATT<br>Audio | Pri: 6.6K ct. Sec: 4000<br>ie: P-P 6L6 | 9 |
| T-21M61A | Univ. Modulation | | 60 WATT<br>Audio | Pri: 125 MA. Sec: 125/250 MA.<br>ie: 5K, 6K, 7K, 8K, 9K, 10K Ohm Loads | 9 |
| T-21M58 | Modulation | | 100 WATT<br>Audio | Pri: 15K ct. Sec: 6.25 K<br>ie: 811 - 812 Class B | |
| T-20C62 | Splatter Suppressor | | 100MA DC | .2 To 1.5 hy. inductance | 10 |
| T-22S45 | Output | | 3 WATT<br>Audio | Pri: 1.5-3K Ohms. Sec: 3.2-4 Ohms.<br>ie: 6A5, 25B6, 50L6 etc. | 11 |
| T-22S86 | Output | | 3 WATT<br>Audio | Pri: 2-14K Ohms. Sec: 3.2-4, 6-8 Ohms<br>Universal Single or PP plate | 11 |
| TS-24S50A | Output | | 5 WATT<br>Audio | Pri: 2K Ohms. Sec: 3.2 Ohms.<br>ie: 50A5, 50L6, 6B4 etc. | 11 |
| TS-24S51 | Output | | 5 WATT<br>Audio | Pri: 5K Ohms. Sec: 3.2 Ohms.<br>ie: 25A5, 35L6, 6B4 etc. | 11 |
| TS-24S52 | Output | | 5 WATT<br>Audio | Pri: 7-10K Ohms. Sec! 3.2 Ohms.<br>ie: 3Q5, 6B5, 6N7, 7B5, etc. | 11 |
| T-22S88 | Output | | 8 WATT<br>Audio | Pri: 2-14K Sec: 3.2-4, 6-8 Ohms<br>Universal Single or PP Plate | 11 |
| T-22S74 | Output | | 25 WATT<br>Audio | Pri: 2.5-14K Ohms. Sec: 1-30 Ohms.<br>Universal Single or PP Plate | 11 |
| T-22R24 | Vibrator Power or<br>117 V AC | 325-0-325 | 135 MA | 6.3V ct. 4.75 A | 12 |
| T-22R42 | Photo-Flash power | 2250V. DC | 1.5 MA | 2.5 V. @ 1.75 A | 13 |
| T-23V23 | Line Drop<br>220-250V 50-60cy. | 110-125V | 250VA | | 14 |

CODE--These Components Found in the Thordarson Catalogue under Title Given Opposite Code Number:

1. UNIVERSAL REPLACEMENT POWER TRANSFORMER
2. PLATE TRANSFORMERS
3. AMATEUR SPECIAL PLATE TRANSFORMER
4. FILAMENT TRANSFORMER
5. CHOKES:UNIVERSAL SWINGING AND SMOOTHING
6. INPUT TRANSFORMERS
7. INTERSTAGE TRANSFORMERS
8. DRIVER TRANSFORMERS
9. MODULATION AND UNIVERSAL MODULATION
10. SPLATTER SUPPRESSOR CHOKE
11. OUTPUT SINGLE & P.P. TO VOICE COIL
12. VIBRATOR POWER TRANSFORMERS
13. PHOTO-FLASH TRANSFORMERS
14. VOLTAGE CHANGER TRANSFORMERS

# GENERAL CONSTRUCTION HINTS

The following hints on the construction of receivers from Meissner Kits are offered to the experimenter to call his attention to a few of the practices that the engineer or professional radio man uses. Their observation will, perhaps, eliminate easily-made errors and will assure proper operation of the completed receiver.

### PICTORIAL DIAGRAM

A pictorial wiring diagram of each kit has been prepared with great care to show what no circuit diagram can show—the physical arrangement of parts and leads, which, in many cases, is more important than some of the values of circuit elements shown in the schematic diagram.

If the arrangement of parts shown therein is followed closely, your kit will work with the same freedom from trouble that characterizes the finished original Master Models leaving the engineering department of the Meissner Manufacturing Division. Very close adherance to the arrangement shown will bring results which cannot be improved even if re-assembled and rewired by Meissner Engineers.

For the sake of clarity, all pictorial diagrams are drawn with components somewhat smaller in proportion to the chassis than a true scale drawing would show them, but they are shown in the proper place with respect to all other parts.

All components have been placed in positions that facilitate wiring as much as possible and which give minimum coupling or regeneration.

Each wire in the pictorial diagram has its color shown to facilitate wiring and checking. The corresponding colors of wire are furnished in the kit, each in sufficient quantity to make the required connections. It is recommended that you follow these colors.

### AVOIDING MISTAKES IN WIRING

It has been found a good plan to go over each wire on the Pictorial Diagram with a colored pencil as that wire is placed in the chassis. If this plan is followed without exception, the progress of wiring is obvious from a single glance at the marked diagram, the unfinished portion is quickly identified, and errors in wiring will automatically be non-existent.

### WIRE LENGTH AND POSITION

All wiring should be kept as short as convenient and should be placed close to the chassis. Wiring, particularly a plate lead, that stands several inches from the chassis provides much greater coupling or regeneration than wiring placed close to grounded metal objects such as the chassis, and consequently should be avoided.

### INSULATING SLEEVING

Braided insulating sleeving or "Spaghetti Tubing" is recommended on a few leads in most kits where there is considerable chance for a short-circuit to occur between that lead and some other object. Most leads, however, will not require sleeving if arranged as shown in the Pictorial Diagram.

### LOCKWASHERS

Lockwashers are provided with all nuts so that each nut may be adequately fastened in such a manner that vibration will not loosen it. Put a lockwasher of appropriate size on each screw before putting on the nut, then tighten the nut until it is quite firmly seated, compressing the lockwasher. If this is done the assembled kit will have the same freedom from loose parts as good commercial receivers.

### SOCKETS

When mounting sockets into a chassis **pay special attention to the position of the Keyway** in octal sockets or to the number one and seven pins in miniature sockets. This precaution will eliminate the distasteful and exasperating task of removing all of the connections from the socket to permit reversing it if it was originally installed incorrectly.

### PAPER CONDENSERS

Most paper by-pass condensers have one connection marked "ground" to designate the outside foil in the condenser. If this end is grounded this outside foil shields the inside foil which is the "hot" or high-potential part of the condenser. Wherever a condenser by-passes any point to chassis it is recommended that the "ground" side of the condenser be connected to chassis.

### DRY ELECTROLYTIC CONDENSERS

Dry electrolytic condensers have their positive end marked "positive" or "plus." When connected into a circuit the **marked polarity must be observed.**

### WET ELECTROLYTIC CONDENSERS

Wet electrolytic condensers usually do not have their polarity marked since the can is always negative. They should never be operated in a horizontal position for more than a few minutes. They all have some means of "breathing" when in operation. If turned upside down or horizontally the fluid may leak out during operation.

### BYPASSING

When circuits are built from kits which are supplied with full constructional data, the builder does not usually have to concern himself with the problems of bypassing. However, if an attempt is made at initial design, a working knowledge of the basic fundamentals of bypassing may mean the difference beween producing a non-workable unit and producing a satisfactory one.

Bypassing is always done in order to form a low impedance AC path to ground or to the proper return point. The frequencies to be bypassed may range from the highest in the receiver to the lowest, and the value of the required bypass condenser depends on its reactance to the lowest frequency which it must pass, and also the impedance of the path if no bypass were present. In general, the reactance of the condenser should be many times (100 to 1000) smaller than the impedance of the alternate path. Take, for instance, a pentode tube operating as an IF amplifier at 455 kc and from a 100 volt supply. It has a 1000 ohm resistor in its screen circuit and we want to return the IF signal, which will be developed on the screen, to chassis rather than let it return through the 1000 ohm resistor to the B supply where it could cause undesired coupling with other IF amplifier stages. Looking up the reactance of the various size condensers to the frequency of 455 kc we find that if we want the reactance to be 300 times less than the resistance, then it must have a value of 3-1/3 ohms which corresponds to the reactance of a .1 mfd. condenser. In determining the reactance of any condenser at any frequency, the following formula may be used.

$$X_c \text{(capacitive reactance)} = 1 \div 2\pi fC$$

where $X_c$ is in ohms
$\pi$ is 3.1416
f is in cycles
and C is in farads

It will be noted in examining circuit diagrams that the ratio mentioned above, that is the ratio of the reactance to the alternate path impedance, is in some cases much greater than 1000. This is particularly true at VHF and UHF where the cost of a ceramic or mica condenser is about the same over a wide range of values, and also at audio frequencies where an electrolytic condenser must be used.

A bypass condenser in combination with a resistor is sometimes referred to as a decoupling network. In this case, the same rule still holds, the reactance should be many times smaller than the resistance.

The same combination is also used in a slightly different manner as a hum filter. A typical example of this is found in the circuit diagram of the power amplifier shown on page 74 of this manual. The B supply to all points in the amplifier, except the 6L6 plates, comes out of the power supply through a 6800 ohm resistor, and following this resistor it is bypassed to chassis through a 10 microfarad condenser. The resistor and the condenser act as a voltage divider to any 120 cycle ripple voltage coming out of the power supply. The reactance of 10 microfarads to 120 cycles is approximately 130 ohms so that we have a voltage divider with approximately a 50 to 1 ratio, and the ripple component will be reduced by a factor of 50 to 1.

Two special cases in bypassing are worthy of note. One is in the case of bypassing high frequency RF. At high frequencies the inductive reactance of a condenser and its leads becomes quite high. For this reason, it is essential that the physical size of the condenser be kept small and its leads short. The other special case is where a bypass condenser is called on to bypass both very low and very high frequencies. An electrolytic condenser is a poor bypass for R.F. so in this special case it will be found advantageous to parallel the electrolytic with a mica, ceramic or paper condenser.

### RESISTANCE CORDS

Equipment for AC-DC operation cannot have a power transformer since the transformer will not work on D-C. Where it is necessary to obtain low voltages for filaments from a 110 volt line, the filaments are usually connected in series and a resistance connected between the filaments and one side of the line. Often, this resistance is built into the line cord. When such is the case, the cord will become quite warm in operation. **It should never be cut short** for to do so would change the resistance and damage the tubes. It should not be operated with the cord all bunched up but should be spread out for proper cooling.

### POWER TRANSFORMERS

Unless specifically marked for other service all Meissner power-transformers are designed for 110 Volt 50-60 cycle supply. They may be used on higher frequencies if desired but cannot be used on lower frequencies. If 40 or 25 cycle transformers are necessary they must be furnished special.

If any power transformer is found to hum or buzz objectionably, the mounting screws should be tightened up. If this fails to cure the trouble, the screws should be loosened up and the edges of the laminations painted with heavy orange shellac, the transformers allowed to stand for several hours, and the bolts then tigntened up.

### GANG CONDENSERS

Gang condensers are instruments of precision that should be looked upon with respect. They are made and adjusted by experts to very close limits of uniformity so that your kit may have the best possible "tracking" and accuracy of calibration. To give them the best protection when handling them or working on any chassis on which they are mounted, keep the condenser closed, that is, plates fully meshed. Never bend a condenser plate unless you are very sure that you know what will happen.

### ADJUSTABLE CONDENSERS

Adjustable mica condensers are used to align many circuits. They are usually built with fine-pitch threads (many threads per inch) to facilitate adjustment. Because of the small size of the threads the strength thereof is limited. Accordingly, **do not force a trimmer screw adjustment.**

### RANGE SWITCHES

Range switches are so designed that their self-wiping contacts keep themselves clean if the switch is placed in a protected place such as inside a closed cabinet or under a chassis. The greatest threat to satisfactory operation is rosin on the contacting surfaces. Therefore, when soldering connections to the switch lugs, heat the lug and wire quite hot by means of the iron before applying the rosin-cored solder so that as soon as the solder is applied it will quickly flow around the wire forming a perfect joint with as little solder as possible. By keeping the quantity of solder small, the chances for the rosin to spatter or flow onto the contacts are minimized.

### SHIELDED WIRE

Shielded wire is not the panacea for all regeneration troubles. It must be used with discretion, remembering that it has a relatively high capacity of not too good power factor. When used on the grid or plate leads of radio-frequency or intermediate-frequency circuits, the capacity added may prevent proper tuning or trimming. Its use, in Meissner Kits has been specified only where it can be used to advantage safely.

### BIAS CELLS

Bias cells are used in many receivers and Kits to furnish grid bias, instead of using a cathode bias resistor and by-pass condenser. They are held in clips some-times singly, some-times in multiples. Fig. 2 shows these units assembled in their holder as used in Meissner Kits.

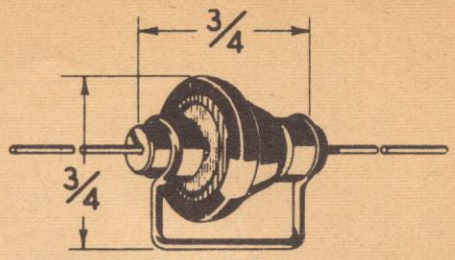


FIGURE 2.

They are actually batteries of essentially constant voltage but very high resistance. As a consequence if a voltmeter is connected across the cell, the meter will read a voltage far lower than the open-circuit or no-load voltage of the cell. It is not a good idea to measure the voltage of a bias cell or to permit it to become short-circuited. If, through accident, the bias cell is short-circuited for some period of time it will probably resume its normal operating characteristics shortly after the short-circuit is removed. If it is desired to determine whether the bias cell is operating properly, a single flash-light dry cell may be substituted for the bias cell to check for similarity of action. The outside containers of both the flash-light battery and the bias cell are the negative terminals.

### DIAL LIGHTING

When dials are illuminated from the rear, uniformity of illumination over the dial scale can sometimes be improved by placing a piece of glossy white cardboard or white painted metal behind the dial lights to act as a reflector.

When dials are illuminated from the front, sometimes improvements in uniformity can be made by equivalent treatment in appropriate places.

### SOLDERED CONNECTIONS

All joints must be well soldered to insure good electrical connections. When the solder on each joint has cooled, test the joint to be sure that it is perfect. Attempt to pull the joint loose or wiggle it. If the joint breaks or the wire wiggles in the "soldered" connection, insufficient heat or solder (probably the former) was used in the first attempt and the joint should be reheated. Use only rosin-cored solder and plenty of heat. All surfaces must be clean. Never use soldering-paste, acid, or other fluid flux.

### SOLDERING IRONS

Satisfactory work can be done with any kind of a soldering iron whether heated by gas, electricity or other source of heat, provided that the iron is kept properly tinned and that it has enough thermal capacity to do the job. For most connections of wires to lugs, even a very small iron will be satisfactory, but where connections are soldered to the chassis or to any other large objects, a large iron is required in order to get the chassis hot enough to solder properly.

The first time a soldering iron is used it is necessary to "Tin" it properly. Get the temperature high enough to melt solder freely, file the desired surfaces until smooth and clean, then quickly apply rosin-cored solder before the cleaned surface has an opportunity to oxidize or discolor badly. If rosin in the solder is the only flux used when tinning the iron, it may be necessary to make several attempts before the iron is tinned properly. A small amount of soldering-paste applied to the cleaned surface of the iron just before the solder is applied will facilitate tinning, but the paste should **never** be used in soldering any of the wiring in the Kit.

If a soldering iron is used that is heated by gas or other flame, the tinning on the point of the iron will be best preserved if the flame does not strike the tinned surface, and if the temperature of the iron is never permitted to get too high. If the iron gets red-hot, it will be necessary to re-tin the working surface before good work can again be done with it. It is far more satisfactory to use a small flame heating the iron almost continuously rather than to use a large flame heating the iron for short periods only. In the latter case invariably the iron will be permitted to overheat.

## MICA CONDENSERS & RESISTORS

Carbon resistors and Mica condensers of different manufacturers are marked in different manners as shown below:

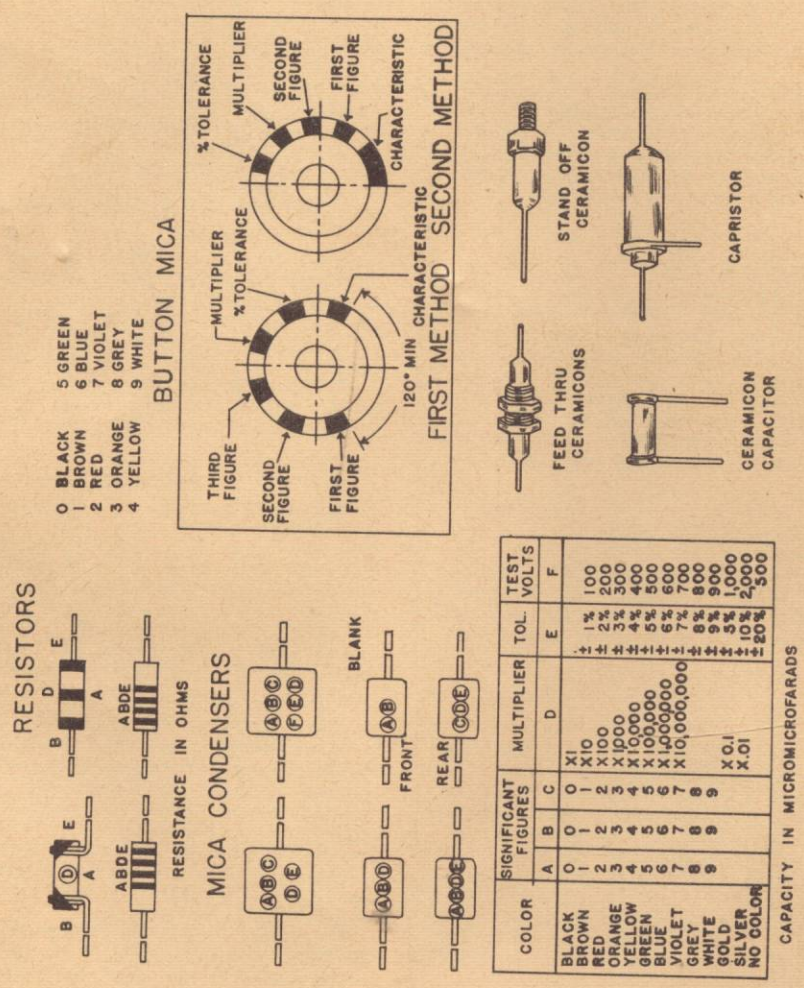


| COLOR | SIGNIFICANT FIGURES A | B | C | MULTIPLIER D | TOL. E | TEST VOLTS F |
|---|---|---|---|---|---|---|
| BLACK | 0 | 0 | 0 | X1 | | |
| BROWN | 1 | 1 | 1 | X10 | ±1% | 100 |
| RED | 2 | 2 | 2 | X100 | ±2% | 200 |
| ORANGE | 3 | 3 | 3 | X1,000 | ±3% | 300 |
| YELLOW | 4 | 4 | 4 | X10,000 | ±4% | 400 |
| GREEN | 5 | 5 | 5 | X100,000 | ±5% | 500 |
| BLUE | 6 | 6 | 6 | X1,000,000 | ±6% | 600 |
| VIOLET | 7 | 7 | 7 | X10,000,000 | ±7% | 700 |
| GREY | 8 | 8 | 8 | | ±8% | 800 |
| WHITE | 9 | 9 | 9 | | ±9% | 900 |
| GOLD | | | | X0.1 | ±5% | 1,000 |
| SILVER | | | | X.01 | ±10% | 2,000 |
| NO COLOR | | | | | ±20% | 500 |

Figure 1.

All resistors in Pictorial Wiring Diagrams are shown approximately 3/4 actual size.

# HANDY RADIO FORMULAE

## Direct Current Relations

| | | | |
|---|---|---|---|
| VOLTS = | $IR$ | $\frac{W}{I}$ | $\sqrt{RW}$ |
| AMPERES = | $\frac{E}{R}$ | $\frac{W}{E}$ | $\sqrt{\frac{W}{R}}$ |
| OHMS = | $\frac{E}{I}$ | $\frac{W}{I^2}$ | $\frac{E^2}{W}$ |
| WATTS = | $EI$ | $I^2R$ | $\frac{E^2}{R}$ |

## Resistance Relations

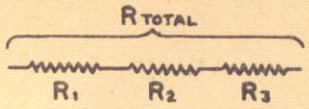


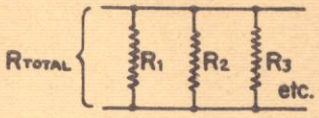


$R_{TOTAL} = R_1 + R_2 + R_3$ etc. $\qquad \frac{1}{R_{TOTAL}} = \frac{1}{R_1} + \frac{1}{R_2} + \frac{1}{R_3}$ etc.

## Two Resistances Only

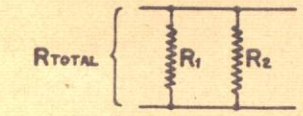


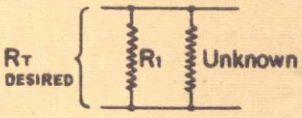


$R_{TOTAL} = \frac{R_1 \times R_2}{R_1 + R_2}$ $\qquad$ Unknown $= \frac{R_T \times R_1}{R_1 - R_T}$

## Capacity Relations

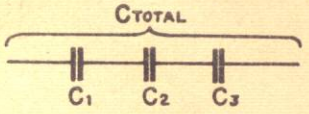


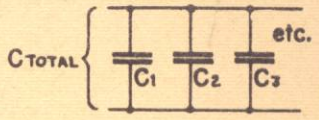


$\frac{1}{C_{TOTAL}} = \frac{1}{C_1} + \frac{1}{C_2} + \frac{1}{C_3}$ etc. $\qquad C_{TOTAL} = C_1 + C_2 + C_3$ etc.

## Two Capacities Only

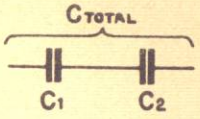


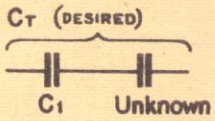


$C_{TOTAL} = \frac{C_1 \times C_2}{C_1 + C_2}$ $\qquad$ Unknown $= \frac{C_1 \times C_T}{C_1 - C_T}$

## Simple Reactance

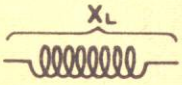


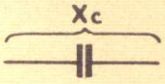


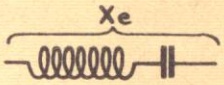


$X_L = 2\pi FL$ $\qquad X_C = \frac{1}{2\pi FC}$ $\qquad X_e = 2\pi FL - \frac{1}{2\pi FC}$

## Complex Impedance

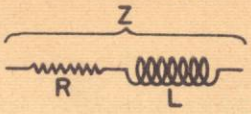


$Z = \sqrt{R^2 + 4\pi^2 L^2 F^2}$

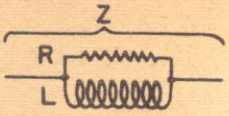


$Z = \frac{2\pi FLR}{\sqrt{R^2 + 4\pi^2 L^2 F^2}}$

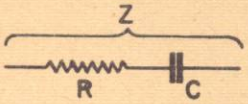


$Z = \sqrt{R^2 + \frac{1}{4\pi^2 F^2 C^2}}$

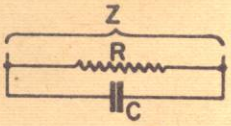


$Z = \frac{R}{\sqrt{4\pi^2 R^2 C^2 F^2 + 1}}$

## Resonance Formulae

$F = \frac{1}{2\pi\sqrt{LC}}$ $\qquad L = \frac{1}{4\pi^2 F^2 C}$ $\qquad C = \frac{1}{4\pi^2 F^2 L}$

Where F is in cycles, L is in henries, and C in Farads

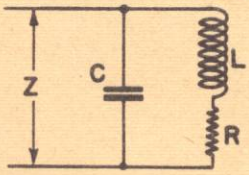


$Z = \frac{2\pi FL}{4\pi^2 F^2 LC - 1}$

At Resonance:

$Z = Q\,2\pi FL$

Where $Q = \frac{2\pi FL}{R}$

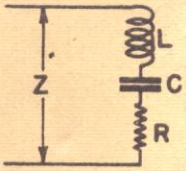


$Z = \sqrt{\left(2\pi FL - \frac{1}{2\pi FC}\right)^2 + R^2}$

At Resonance:

$Z = R$

## Coupling Coefficient

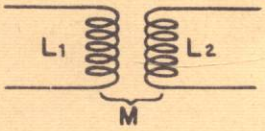


$K = \frac{M}{\sqrt{L_1 \times L_2}}$

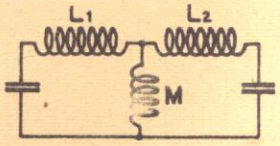


$K = \frac{M}{\sqrt{(L_1+M)(L_2+M)}}$

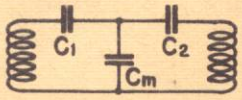


$K = \frac{\sqrt{\frac{C_1 \times C_m}{C_1 + C_m} \times \frac{C_2 \times C_m}{C_2 + C_m}}}{C_m}$

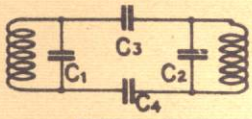


$K = \frac{\sqrt{\frac{C_1 \times C_m}{C_1 + C_m} \times \frac{C_2 \times C_m}{C_2 + C_m}}}{C_m}$

Where $C_m = \frac{C_3 \times C_4}{C_3 + C_4}$

## Over-Coupled Circuit Frequencies

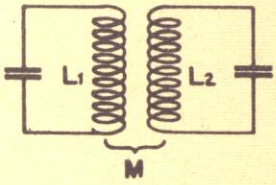


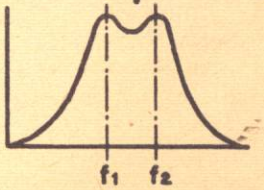


$f_1 = \frac{F}{\sqrt{1+K}}$

$f_2 = \frac{F}{\sqrt{1-K}}$

Where F is the resonant frequency of each circuit independent of the other and K is the coupling-coefficient

# GENERAL INFORMATION

## INTRODUCTION

In any circuit using transformers or coils it is necessary to know how to select the proper transformer or coil for the specific application. All complex circuits can be broken down into numerous simple circuits as discussed in the following text. This should enable the reader of this manual to make the most advantages selection of components. Along with these basic circuits, by application, is an explanation of the theory of design and selection to better assist in the selection of coils and transformers.

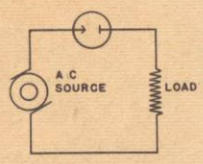


I. Rectification: An alternating current is applied to a load in series with a device permiting high current flow in one direction and relatively low current flow in the other direction.

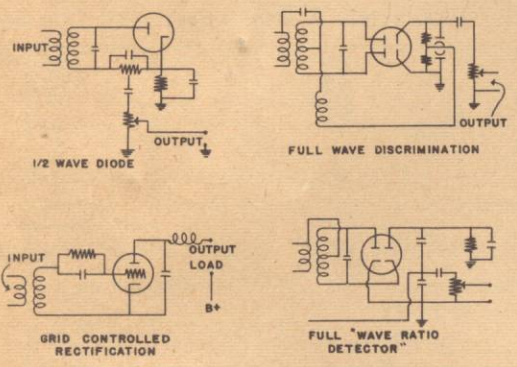


DETECTION: Intelligence transmitted on an inaudible frequency must be detected or demodulated to be understood. The function of the receiver is to reproduce the output signal as nearly like the original as possible.

Diode detectors employ half wave, full wave, and grid controlled rectification. Typical circuits and components are shown above.

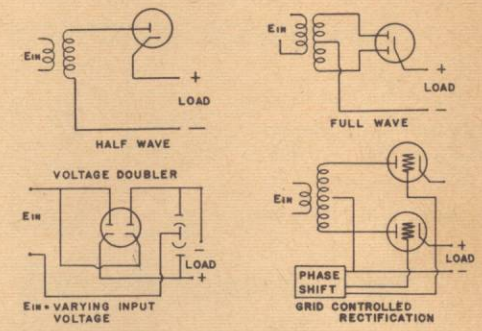


Rectifiers may be tubes (Vacuum or gaseous), copper oxide, selenuim, etc.

Rectifying action is used for:

SUPPLYING D.C. POWER: Circuits include half wave rectifiers, full wave rectifiers, voltage doublers, and grid controlled Rectifiers-----

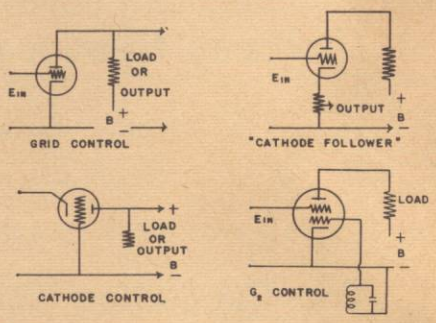


II. Amplification: A changing voltage of low magnetude is applied to control the electron stream of a higher magnetude.

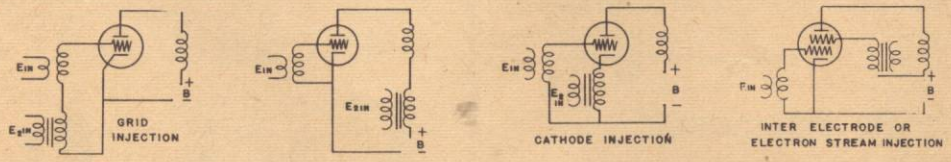


Grid Controlled Amplification is composed of five types; classified by the location of the bias voltage on the curve formed by the plate current flow plotted against the grid voltage; as follows:

CLASS A--In a class A Amplifier the grid bias is fixed so that plate current flows at all times.

CLASS A $B_1$ AND CLASS $AB_2$--In a class AB Amplifier the grid bias is fixed so that plate current flows for appreciably more than half but less than the entire duty cycle. The peak driving voltage in a class $AB_1$ Amplifier does not exceed the negative bias voltage. In a class $AB_2$ Amplifier the peak driving voltage exceeds the negative bias voltage.

CLASS B--A class B Amplifier has its grid bias at approximately cut off in order that there will be no appreciable current flow when there is not an exciting voltage applied to the grid.

CLASS C--A class C Amplifier has its grid bias fixed at a point exceeding cut off so that plate current flows only during a fraction of the input duty cycle.

Class A Amplification finds its greatest use in receiver radio frequency circuits. Class AB and Class B in audio power amplifiers, and Class C in radio frequency power amplifiers.

III. Frequency Mixing: Frequency mixing can be employed in any of the circuits of an electron tube and is converting frequency in superheterodyne receivers, modulating radio frequency amplifiers, and mixing speech and music.

Frequency conversion in superheterodyne receivers is commonly done by pentagrid converter tubes which utilize electron stream injection. The input signal (E) is beat against the mixing signal ($E_2$) to give basically the following four signals in the plate circuit: $E_1$, $E_2$, $E_1+E_2$, and $E_1-E_2$; the latter used as the IF signal in the receiver.

IV. Other Circuits: These include automatic gain control, automatic frequency control, bridge, limiter, oscillator, separator, superregenerative, picture tube filter, etc. Since the scope of this manual must be limited these circuits have not been discussed. Careful analysis will show their similarity or that they are a part of the circuits covered in topics I, II, and III.

# RADIO COILS AND CIRCUIT APPLICATIONS

## RADIO COILS

Radio coils are frequently thought of in the light of being essentially radio components, and as a part of the more general classification "Inductance." In order to understand the performance of coils in radio receivers, it is first necessary to understand the fundamental ideas about inductance and about resonant circuits.

Inductance is of two general types, "Self-Inductance" and "Mutual-Inductance," both of which are important in a radio receiver and both of which are described below.

## SELF INDUCTANCE

Self inductance is, by definition, that magnetic property of a circuit that opposes any change in current. When a current flows in a wire, a magnetic flux is set up around that wire. If the current increases, the flux increases and, as it increases, the flux generates a voltage that tends to oppose the increase in current.

If the conductor is wound into a coil, the flux from many turns is concentrated so that each turn in the coil encloses not only its own flux, but also that from many other turns, thereby greatly increasing the effectiveness of each turn. Where the turns are large in diameter but bunched very closely together, the inductance increases practically in proportion to the square of the number of turns in the coil.

The practical unit of inductance is the "Henry" which is that value of inductance in which one volt is generated when the current is changing at the rate of one ampere per second. This unit of inductance is of quite convenient size when dealing with problems in power filter design, but is much too large for convenience when dealing with problems in intermediate frequencies or in high frequencies. For intermediate frequency work a one-thousandth part of a Henry, called a millihenry, is the most convenient unit of inductance, and for higher frequencies the microhenry, a one-millionth part of a Henry, is more convenient.

When an inductance is connected in an alternating current circuit, the current that flows is a function of the voltage across the inductance, the frequency of the current, and the magnitude of the inductance. The impedance to the flow of current is expressed:

$X_L = 2\pi FL$ or $X_L = \omega L$ where

$\omega = 2\pi$ times Frequency (cycles per second),

$F$ = frequency (cycles per second),

$L$ = inductance in Henrys.

Impedance in an alternating current circuit is very similar to resistance in a direct current circuit except that the magnitude of the impedance changes with frequency. If it were not for this fortunate effect, radio receivers and any other devices employing resonant circuits would be unknown.

## MUTUAL INDUCTANCE

In the section on Self-Inductance, above, the definition of "Self-Inductance," and the properties thereof were briefly explained. If, in the example of the bunched winding, half of the turns formed one circuit and the remaining half formed another circuit, a change in magnetic flux occasioned by a change in current in one winding, would induce two voltages, one in its own winding opposing the change in current, and the other in the second coil. This phenomenon of a voltage induced in the turns of one coil by a change in current in another coil is known as "Mutual Inductance."

The unit of Mutual Inductance is the "henry" defined as that value of mutual inductance in which one volt is generated across the terminals of one coil when the current in the other coil is changing at the rate of one ampere per second.

The practical units for Mutual Inductance are the same as those for self inductance, namely the Henry, Millihenry and Microhenry.

A very convenient property of mutual inductance is that the mutual inductance existing between two dissimilar coils is the same, whether the current change is in the large coil and the voltage is measured in the small one or vice versa, regardless of how dissimilar the coils may be.

This phenomenon called mutual inductance makes the formulae for inductances in series or in parallel much different from the formulae for resistances. In the latter case, the equivalent resistance of two resistances in series is the sum of the individual resistances; but in the case of two inductances in series, there may be a mutual inductance between the coils that may seriously disturb that simple relationship. If the two coils are placed so that the wires of one coil and those of the other coil occupy practically the same space, as in the case of winding the second coil as a single layer directly over the first single layer coil, or between the turns of the first coil, the overall inductance of two equal coils wound as above, will be twice the sum of the inductances of the two individual coils, if the coils are connected "Aiding" and will be practically zero if connected "Opposing." This is a special case which seldom occurs, but shows one of the extremes of mutual inductance which can influence the equivalent inductance of two coils connected in series.

The general expression for any case involving only two coils in series is: overall inductance equals the sum of the individual inductances plus or minus twice the mutual inductance. The reason for this relationship is given in the following explanation.

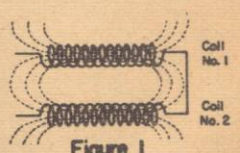

Figure 1

A current change in coil No. 1 induces in itself a voltage proportional to its inductance, and similarly in coil No. 2 a voltage proportional to the inductance of coil No. 2. The current change in coil No. 1 induces a voltage in coil No. 2 proportional to the mutual inductance between the two coils, and similarly the current change in coil No. 2 induces a voltage in coil No. 1 of the same magnitude because the mutual inductance is the same whether measured from the first to the second coil, or in the reverse direction. The overall inductance is proportional to the total voltage induced, and is consequently equal to the sum of the individual inductances plus or minus twice the mutual inductance. The "plus or minus" provision is made because the voltage induced in one coil by a current change in the other does not necessarily aid the self-induced voltage in the coil. Inductances themselves are positive, there being no negative inductances; nor, strictly speaking, are there any negative mutual inductances; but a mutual inductance may be connected into a circuit so that its effect may oppose some other effect and can be considered as a negative mutual inductance *when so connected.*

The maximum value of mutual inductance that can exist between two coils is equal to the square-root of the product of the two individual inductances. In practice it is very difficult to obtain sufficiently close coupling to produce this limiting value unless the two coils are wound together, the wires from both circuits being wound on the coil simultaneously.

## COUPLING COEFFICIENT

When two coils are arranged so that some definite mutual inductance exists, the coils are said to be magnetically coupled.

In many calculations, it is frequently convenient to express the amount of coupling as a percentage of the maximum that could possibly exist, rather than a numerical value of mutual inductance. In such a case, the term applied to this percentage is "coupling coefficient" which, for inductance, is defined as the quotient resulting from dividing the existing mutual inductance by the maximum possible mutual inductance (square-root of the product of the two separate inductances).

## DESIGN OF RADIO COILS

Since almost all radio-frequency coils operate in resonant circuits, the coils must be designed for three important characteristics — inductance, distributed capacity, and losses.

For simple geometric forms such as the solenoids, formulae are available in many text books for calculating the above mentioned characteristics, but for universal wound coils no satisfactory formulae exist for any one of the three quantities. Within limits, the inductance and distributed capacity are practically constant with frequency, but the losses change with frequency, requiring different designs for minimum losses in coils of the same inductance but operating at different frequencies. This is the reason for the great amount of design work required on radio-frequency coils.

The losses in a coil may be divided into the following classes:

1 — Ohmic or D.C. losses in the wire.

2 — Eddy-current losses in the conductor

3 — Eddy-current losses in the shield

4 — Eddy-current losses in the core material
5 — Skin effect
6 — Dielectric loss in the wire insulation
7 — Dielectric loss in the terminal strip

None of these items is independent of the others, and a change to improve one usually changes one or more of the remaining factors.

Considering the sources of loss in the order named above, the D.C. or ohmic resistance of a coil can be reduced by increasing wire size, in which case the coil becomes larger, and, in the case of shielded coils, brings the coil closer to the shield, which consequently increases the shield losses. In addition, because the copper cross section increases, permitting higher eddy-voltages to be generated, the eddy-current losses in the conductor increase.

The eddy-current losses in the conductor are minimized by subdividing the conductor as finely as is economical, insulating each of the subdivided parts from all other parts. Commercially, this is done by the use of so-called Litz (Litzendraht) wire, which consists of many strands of fine wire, each strand individually insulated with enamel, and the group of wires covered with some insulation, usually silk, nylon, celanese, or cotton is used over the group.

Eddy-current losses in the shield are minimized by using a shield as large as possible, or large enough so that further increase in diameter produces no improvement, and by the choice of shield material of the lowest economical specific resistance. The shield materials in common use are copper, aluminum and zinc, named in the order of their merit. Magnetic alloys, such as sheet iron or silicon steel, are very high in R F losses.

A peculiar phenomenon with regard to composite shields is that whenever a shield is made of two closely bonded materials, the characteristics of the shield approach the characteristics of the poorer material. For example, a copper plated steel shield is almost as bad as an all steel shield of equal dimensions even though the plating is commercially heavy.

Iron cores are frequently used in coils to increase the effectiveness of the turns of wire, thereby permitting a given inductance to be obtained with fewer turns, and consequently with lower D.C. resistance. The core itself introduces some eddy-current losses which partially offset the improvement made by reducing the number of turns.

Eddy-current losses in the conductor have dictated the use of Litz wire wherever economically possible, but "Skin Effect" goes a step farther and requires that the conductor not only be subdivided into a multiplicity of individually insulated strands but that these strands be arranged in a special manner. In an attempt to have each individual strand occupy a place on the surface of the conductor an equal percent of the time, so that the current would divide equally among the many strands and thereby give the lowest effective R.F. resistance, the original braided Litzendraht wire was developed. Because of price, however, modern "Litz" wire as used in radio receivers, is merely twisted, which brings different strands to the surface at different points giving a result approaching that of braided Litz, but at far less expense. Where Litz wire is made without twisting, that is, with parallel strands, the results are inferior to twisted Litz on two counts: (1) the losses are consistently higher than for twisted Litz, (2) coils made with it exhibit greater variations in resistance than coils made from twisted Litz. (All Meissner Litz wire is twisted.)

A very important and frequently unsuspected contributor to coil losses is the insulation of the wire. Analyzing a coil, it will readily be apparent that the fabric insulation on the wire is the dielectric of the distributed capacity of the coil. The losses in the insulation influence the coil just as surely as would an external condenser of the same capacity connected across the coil, having the same fabric for a dielectric. With this in mind, many coil designs have been improved by increasing the thickness of fabric insulation, thereby reducing the distributed capacity and consequently its detrimental effect. In many cases, this effect was so important that increasing the insulation thickness resulted in improvement in the coil even though smaller wire was used to give space for the insulation!

In considering the distributed capacity of a coil it must be remembered that, in many instances, the terminals on the coil contribute an important part to the distributed capacity, and that the losses in the terminal strip should not be neglected. On some coils of high quality, hard rubber terminal strips are used to minimize the losses occasioned by the terminal strip.

Since all of the losses in a coil taken together make up the radio frequency resistance of the coil, a single number can be used to express this quantity, but the resistance alone does not give sufficient information to judge the electrical excellence of the coil. Resistance is usually the undesired quantity in a coil, and practically all coil designs attempt to make it as low as possible. Reactance is the desired characteristic of the coil and is the product of frequency, inductance and the usual multiplier, $2\pi$. A special term has been given to the ratio of the desired to the undesired characteristic of the coil. This term is "Q" which is defined as the reactance divided by the resistance.

From the foregoing discussion of the factors influencing the performance of radio coils it is obvious that when Meissner lists high "Q" coils the products offered are the results of many hours of work on each individual design backed by the experience of years on the same type of problem.

## SHIELDING

Having considered, in the paragraphs last preceding this section, the effect of high insulation loss in a radio coil or its associated terminal strip, it immediately follows that the losses in any associated wiring should also have an effect on the efficiency of the circuit. Probably the most serious offender in this category is a shield on any high potential R F hookup wire.

The common type of shielded wire, consisting of two wax impregnated cotton braids over the conductor, covered with a woven copper shield is particularly bad when used on high- "Q" resonant circuits. Such shielding frequently has a capacity of 50-to 100-mmfd. per foot which means that if more than a few inches are used, so much capacity may be added to the circuits that they may not be tunable with the trimmer condenser provided. In addition, the capacity added has high losses even when dry. It is characteristic of this type of wire that as it becomes damp its losses increase tremendously, thereby greatly reducing the efficiency of high-"Q" circuits, and, in addition, the capacity increases, detuning the circuits. This loss in efficiency is bad enough, but when detuning is added, the cumulative results may prevent operation of a receiver having an appreciable amount of shielding on grid or plate leads. Because of these humidity effects, the safe rule to follow is never to use a close fitting shield on any R.F. or I.F. circuit. If, however, it is necessary to use shielding, some form of large diameter shielding should be used. A piece of spiral spring, whose inside diameter is considerably larger than the outside diameter of the insulation on the wire passing through it, makes a good flexible shield. In this case, a great deal of the dielectric between the conductor and the shield is air. This partially reduces the dielectric loss, but even this should be avoided if possible.

The electrically ideal type of shielding is the partition type which separates one tube and its associated wiring from another tube and its wiring. Since it is not always possible to employ partition shielding, the next best thing to use is either rigid bare wire in a rigid shield tube, or a small wire in a large diameter shield such as is frequently employed on automobile antenna lead-ins.

If a close-fitting shield must be used, the best economical commercial insulation obtainable such as polyethylene or some of the newer plastics should be used.

## RESONANT CIRCUITS

The fundamentals of resonant circuits are covered so thoroughly and completely in many standard text books on radio, that no attempt will be made here, in limited space, to cover the same territory. Only a very few important ideas and relationships will be brought to your attention.

Inductance and capacity, when measured in an alternating current circuit are found to possess "Reactance" measurable in ohms. The reactances, although both measured in ohms, have the peculiar property of adding to resistive ohms as if the resistance were the base of a right angle triangle, the reactance were the altitude of the triangle, and the overall impedance the hypotenuse of the triangle. This relationship is expressed as the square of the hypotenuse being equal to the sum of the squares on the other two sides.

The reactances of a condenser and of an inductance are of opposite sign, however, so that if an inductance and a capacity are connected in series, the overall reactance will be the *algebraic* sum, or in this case, the numerical difference between the two reactances.

From the above statement it follows that for any given value of inductive reactance, a value of capacity can be chosen whose reactance will exactly equal the inductive reactance. A special name, "Resonance" has been given to this condition. The circuit is referred to as being "In Resonance." Under this condition the current is limited only by the resistance in the circuit.

When circuits are resonant, some very astonishing things can happen. Consider the circuit shown in Fig. 2.

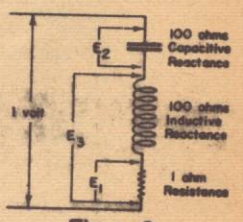

Figure 2

This is a theoretical case because it is impossible to obtain both inductance and capacitance without resistance, although, of the two, a perfect condenser can be approached closer than a perfect inductance. If all of the resistance is considered to reside in the inductance, $E_1$ ceases to exist as a separate voltage that can be measured with a meter, but it still limits the current flow at resonance. The voltages that then could be measured are $E_2 = 100$ and $E_3 = 100.005$ volts.

If an inductive and a capacitive reactance are connected in parallel the total reactance is higher than the highest reactance instead

of being lower than the lowest, which is the case existing when reactances of the same type are connected in parallel.

The reason why the effective impedance of two similar impedances connected in parallel is lower than the impedance of either separate circuit branch is immediately obvious. The second circuit offers a second path for current, raising the total current, and, since it is known that with constant voltage supplied, increased currents indicate lower impedances. The reason why the impedance rises when dissimilar reactances are connected in parallel is explained as follows:

When an inductive reactance is connected across a supply of alternating voltage a current flows 90 electrical degrees or ¼ of a cycle behind the voltage. When a capacitive reactance is connected across a similar supply, a current flows 90 electrical degrees or ¼ cycle ahead of the voltage. From this it is obvious that when both types of reactance are connected to the same voltage source, the currents will be exactly ½ cycle apart, meaning that the moment the current is at its positive peak on the alternating current wave in the condenser, the current in the inductance is at its negative peak, or that the total current in the two circuits will be the arithmetic difference between the two individual currents. It is obvious then that since connecting two dissimilar reactances (one capacitive and one inductive) in parallel reduces the total current drawn from the line, the impedance must increase. If the condenser and inductance both have zero losses, the same current would flow in the inductance as if the condenser were absent, and the same current would flow in the condenser as if the inductance were absent, but no current would be drawn from the line. The impedance of the combination must therefore be infinite.

Since radio coils do not come within 10% of being as good as high grade condensers, and since condensers themselves are not perfectly loss free, it follows that the infinite impedance circuit discussed is theoretical and that it is highly desirable to have a convenient method of calculating the impedance of actual circuits.

Starting with the formula for the impedance of an inductance of practical design in parallel with a condenser simple algebraic manipulation produces the very workable formula

Resonant Impedance $= Q\,\omega\,L$

where Q is the "Q" of the coil (by definition, its reactance divided by its resistance) $\omega = 2\pi$ times frequency in cycles per second, and L is the inductance in henrys.

## ANTENNA COILS

The basic types of antenna coils have high-impedance inductive, high-impedance capacitive, low-impedance inductive and low-impedance capacitive couplings. Typical values of capacity, self inductance and mutual inductance for these four types of broadcast coils are shown in Fig. 3.

## HIGH-IMPEDANCE PRIMARY

High-impedance magnetic coupling, usually spoken of as "High-Impedance Primary" is the most universal type of coupling on the broadcast range of household receivers. It has good image ratio, reasonable gain, and, when properly designed, almost negligible misaligning of the first tuned circuit as the size of antennas is changed. With the usual design of coil, this type of coupling results in higher gain at the low-frequency than at the high-frequency end of the tuning range. Sometimes, to compensate for this deficiency at the high frequency end, a small amount of high-impedance capacity coupling is used. This capacity is connected from the antenna to the grid terminals of the coil. Its size is from 3 to 10 MMF.

It is to be noted that capacity coupling can reduce as well as raise the gain of a high-impedance magnetically coupled transformer, depending upon the polarity of the windings. **If capacity coupling is to aid the magnetic coupling, a current entering the antenna terminal of the primary and the grid terminal of the secondary must go around the coil form in opposite directions, and the coupling capacity must be connected between these two points.**

## LOW-IMPEDANCE PRIMARY

Antenna coils with low-impedance primaries, although cheaper to manufacture than high-impedance primaries, are rare on the broadcast band of modern home radio receivers.

This type of coupling, when used with any of the conventional household antennas, gives a great deal more gain at the high-frequency end than at the low-frequency end of the tuning range. This gives rise to very poor image-ratio when used in a superheterodyne receiver.

The closely coupled low-impedance primary reflects the antenna capacity across the tuned circuit in an amount depending upon its inductance and coupling coefficient. Without attempting to derive an expression for the actual magnitude of this effect, suffice it to say that if the primary is large enough to give reasonable gain at the low-frequency end of the frequency range, the reflected antenna capacity will be so high that the secondary tuning condenser will not be able to tune to the high-frequency end of the band, and every different antenna capacity would change the amount of mistracking. Because of this sensitivity to changes in antenna capacity, and because of poor image ratio, the low-impedance primary is seldom used on broadcast-band antenna coils.

On short-wave coils, the low-impedance primary is used almost exclusively because the antenna gain is usually higher than with a high-impedance primary, and the antenna is usually resonant in or below the broadcast band. For this reason, the image-ratio does not suffer nearly as much as in the case of using low-impedance broadcast coils in place of coils with high-impedance primaries.

## HIGH-IMPEDANCE CAPACITY COUPLING

The high-impedance capacity coupling scheme consists essentially of connecting the antenna directly to the grid end of the first tuned circuit through a capacity, usually from 1 to 10 mmf. This method of coupling has been popularly used on amateur receivers of simple design, where simplicity of coil construction was imperative, but is not used in broadcast receivers by recognized manufacturers because of the very poor image-ratio that results.

Practically speaking, the only use for high-impedance capacity coupling in a broadcast receiver is as reinforcement to a high-impedance primary, as discussed in the paragraph on "High-Impedance Primaries."

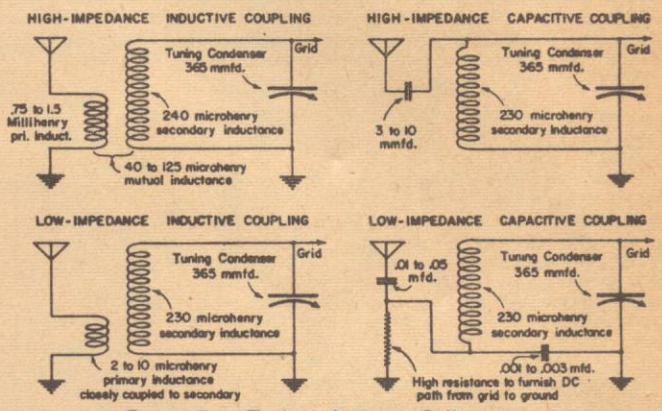


**Figure 3 Typical Antenna Coils**

## LOW-IMPEDANCE CAPACITY COUPLING

Low-impedance capacity coupling, familiarly known among radio engineers as the Hazeltine coupling system, consists of coupling the antenna directly to the junction of the low side of the tuning inductance with the high side of a high-capacity coupling condenser which is connected to ground. (See Fig. 3.) The voltage across this coupling condenser is multiplied by the resonance phenomena of the tuned circuit to give appreciable voltage at the grid.

This circuit is particularly adapted to receivers that must use a high-capacity shielded lead-in such as an automobile radio receiver. In such a circuit, the shielded lead-in is made part of the coupling capacity because of the circuit arrangement and, practically speaking, causes no loss in voltage as would be occasioned if this capacity would be connected across a high-impedance primary. For this statement to be strictly true, it is necessary that the shielded lead-in have a good power factor or else the losses in the lead will slightly reduce the effective circuit "Q," thereby bringing down the gain in the antenna coil by a corresponding amount.

This type of coil has high gain and excellent image-ratio. The drawbacks to its use are that the R.F. amplifier circuit, if used, must have a value of capacity included in its tuned circuit equal to the antenna coupling capacity in order that proper tracking may result.

An alternative is to use a tuning condenser whose antenna section is different than its R.F. section, but this can only be done where a heavy production schedule justifies the additional tool cost.

When this coupling scheme is used in household radio receivers, precautions must be taken to prevent 60-cycle hum modulation from being introduced into the first tuned circuit by low-frequency voltages picked up on the antenna circuit. In the best of receivers employing this circuit, an R.F. choke is connected from antenna to ground to provide a low impedance path for power frequencies in order to keep hum modulation off of the grid of the first tube.

## R. F. COILS

R.F. coils may be divided essentially into four types: high-impedance magnetic, low-impedance magnetic, high-impedance magnetic with high-impedance capacity coupling, and choke-coupled circuits.

The high-impedance magnetically coupled R.F. coil has characteristics very similar to the high-impedance antenna coil and therefore needs little discussion.

The low-impedance magnetically coupled R.F. coil has the same deficiency as the similar antenna coil and is consequently seldom used in the broadcast range of a superheterodyne receiver. Like the antenna coil, it has possibilities for higher gain than the high-impedance type, but usually the selectivity is enough worse to rule out this type of coupling on modern receivers.

In the shortwave range, this is the most popular type of circuit, because it is the one giving the highest gain and since, with a fixed capacity of gang condenser, it becomes increasingly more difficult to obtain high gain as the frequency is increased, this circuit with its high gain is the almost universal choice in spite of its deficiencies in image-ratio.

The R.F. coil employing a high-impedance primary in combination with high-impedance capacity coupling is the most flexible design, and is popularly used for that reason. By shifting the primary resonant frequency and by changing the amount of capacity coupling together with changes in "Q" of the secondary circuit, the overall gain of an amplifier stage can be made to have almost any desired shape with respect to frequency; that is, it may give high gain in the middle, at the high-frequency end, at the low-frequency end, or almost any shape desired, to compensate for the frequency characteristics of the other stages employed in the receiver.

The choke-coupled R.F. circuit is very similar to the high-impedance primary with high-impedance capacity coupling, except that, in choke coupling, the magnetic coupling has been made zero, but design still requires that the choke have as much inductance as a primary would have, in order that the resonance of the primary circuit may fall outside of the tuning range of the secondary.

## OSCILLATOR COILS

Oscillator coils in modern receivers exhibit less variation in types than any other R.F. component. They either do or do not have a "tickler."

Those oscillators that do not have a tickler coil, oscillate by virtue of the feedback across the padding condenser. A typical circuit of such an oscillator is shown in Fig. 4. Using a 456 KC IF system requiring relatively small padding condensers makes this type of operation possible. The only bands that have padding condensers small enough to sustain oscillation are the long wave and broadcast bands. In some high frequency oscillators a similar circuit is used with only the tube interelectrode capacities providing the voltage dividing feed back network and with the tuning condensor connected across the entire circuit. A typical tickler circuit is shown in Fig. 5.

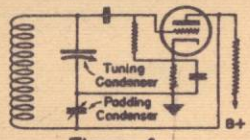

Figure 4

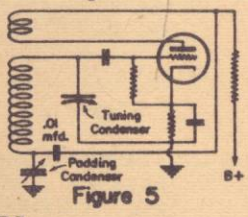

Figure 5

## IF TRANSFORMERS

Intermediate-frequency transformers used in radio receivers have taken a variety of forms and have operated at many different frequencies. They may be divided into several classes according to the number of selective circuits: untuned or self-tuned, single-tuned, double-tuned, and triple-tuned. Receivers have employed IF transformers with more than three tuned circuits per transformer but such cases are very rare.

The untuned IF transformer usually added practically no selectivity to a receiver. Its principal purpose was to give a high amplification at very little cost. It was always used in conjunction with one or more tuned IF transformers which supplied the required selectivity.

## SINGLE-TUNED IF TRANSFORMERS

The single-tuned IF transformer has taken two important forms, the bi-filar coil and the double coil types.

In the former case, the two wires constituting primary and secondary are wound simultaneously, forming a coil that is a single physical unit yet having two independent circuits. The start of the primary was usually the plus "B" connection and the start of the secondary was ground. The outside of the primary was the plate connection and the outside of the secondary was the grid connection. These transformers were characterized by very high gain and comparatively little selectivity. They were used on receivers that had no A.V.C. and the secondary low-potential end usually connected directly to chassis. Such a transformer could not be used satisfactorily in a receiver employing the conventional diode type A.V.C. circuit for the reason that on damp days there is enough leakage between primary and secondary to produce a decidedly positive bias on the grids of the automatically controlled tubes.

In addition, such a structure possesses such a high capacity between windings that the ripple in the "B" supply would be transferred to the diode load resistance which would produce a bad audio hum in the output of the receiver. A third reason why this type of transformer would not now be acceptable, even if there were no diode load resistance to pick up hum or to be incorrectly biased, is the frequent failure of windings due to electrolytic corrosion. Where two conductors are run so intimately parallel for so many turns, with opposite D.C. potentials applied to the two wires, ideal conditions are set up for rapid failure due to electrolytic corrosion in the presence of moisture.

With this transformer redesigned to have two physically separate coils wound side by side, the objectionable features of leakage, corrosion and hum transfer are reduced to a very small per cent of their original importance, and transformers acceptable in today's critical market can be produced. The largest remaining objection to the single-tuned transformer is selectivity. In a low-frequency amplifier operating at 125 KC or 175 KC, the transformers are too sharp for good audio fidelity, and at the higher intermediate frequencies such as 456 KC, the transformers do not add sufficient adjacent-channel selectivity.

Single-tuned transformers may be divided into two classes according to the circuit tuned; some have their primaries tuned while the remainder have their secondaries tuned. As far as secondary voltage is concerned, there is not a great deal of difference regardless of which winding is tuned, but if there is a question of single-stage oscillation in the tube driving the single-tuned transformer, greater stability is had by tuning the secondary than by tuning the primary.

## DOUBLE-TUNED IF TRANSFORMERS

The double-tuned IF transformer is, by far, the most popular type. It is simple in construction, has negligible leakage, no measurable hum transfer into diode circuits and can have its selectivity curve made as sharp as two single-tuned transformers in cascade, or can be considerably broader at the "Nose" of the selectivity curve than two cascaded single-tuned transformers, yet on the broader part of the selectivity curves maintain practically the same width as the cascaded single-tuned transformers.

If the coupling on a double-tuned transformer is made sufficiently loose, the transformer is quite selective and has a resonance curve of the same general shape as a single circuit, except sharper. As the coupling is increased, the gain will go up until the point of "critical coupling" is approached where the gain of the transformer is practically constant but the selectivity curve is changing, particularly at the "nose" of the curve. As the coupling continues to increase, first there is a decided flattening on the nose of the selectivity curve, after which continued increase in coupling produces an actual hollow in the nose of the curve. Still greater increase in coupling can spread the two "humps" and deepen the "hollow" in the nose of the response curve until a station can be tuned in at two places on the dial very close together.

Variations in magnetic coupling cause variations in the gain and selectivity of IF transformers as described above, but this is not the only source of variation. Variations in capacity coupling can be equally important in transformers operating above 400 KC. This variation is so important that it is discussed separately in the section "Capacity Coupling in IF Transformers."

The complete selectivity characteristics of any circuit can be shown only by a curve from which it is possible to determine the performance at any point, but nearly as much useful information can be given in a few figures where the selectivity of IF transformers is concerned.

The Meissner catalog lists the "Band Width" of each transformer at two points on the selectivity curve. These two points are labeled 2X, and 10X meaning respectively, two times, and ten times. These terms designate the place on the selectivity curve at which the gain at resonance is two, or ten times the gain at the point specified. The width of the response curve has been measured at these points and has been tabulated so that the comparative selectivity of transformers may be judged.

## TRIPLE-TUNED IF TRANSFORMERS

Triple-tuned IF transformers have been used for two general purposes: greater adjacent-channel selectivity without increasing the number of tubes and transformers, or a better shape on the nose of the selectivity curve to produce better audio fidelity than is produced by double-tuned transformers. Capacity coupling on such transformers is of even greater importance than in double-tuned transformers, especially where both plate and diode hook-up wires come out at one end of the transformer shield, as is the usual case with output IF transformers.

## CAPACITY-COUPLING IN IF TRANSFORMERS

The ordinary circuit diagram of a double-tuned IF transformer is as shown in Fig. 6, but actually the circuit in Fig. 7 is more representative of true conditions.

The capacity coupling, shown in dotted lines, is a very important part of the coupling in practically all transformers operating at frequencies above 400 KC. This statement applies with even greater emphasis as the frequency, or the "Q," of the coils is raised.

The capacity that is effective in the above mentioned "capacity coupling" is that which exists between any part of the plate end of the primary circuit and any part of the grid end of the secondary circuit; to be more specific, the capacity between the plate and grid sides of the trimmer condensers, the plate and grid ends of the coils, the plate and grid leads, the grid lead and the plate end of

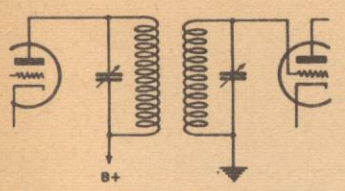


Figure 6

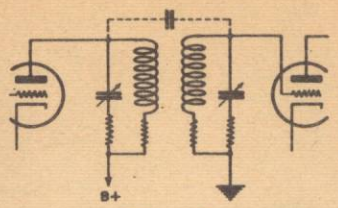


Figure 7

the primary coil, and between the plate lead and the grid end of the secondary coil.

The capacity between the two high-potential plates of a trimmer condenser such as the Meissner unit shown in Fig. 8 is 0.35 mmfd. if both trimmers have an even number of plates and the bottom plate of each trimmer (on the same base) is a high-potential (either grid or plate) electrode. If an odd number of plates is used on both trimmers, the capacity drops to 0.07 MMF The difference between these two coupling capacities, amounting to only 0.28 MMF. is sufficient to make quite a difference in the gain of transformers operating above 400 KC.

Figure 8

Double-tuned IF transformers may be built with the magnetic coupling either aiding or opposing the capacity coupling. For reasons of production economy, both coils on one dowel are usually wound simultaneously, which means they must be wound in the same direction. For reasons of production uniformity, the insides of both windings are usually chosen as the high-potential ends of the coil so that the outside (low-potential) ends of the coils will automatically act as spacers to keep the high-potential hook-up wires from approaching the high-potential ends of the coils.

If transformers are designed so that the circuits are considerably under "Critical Coupling," variations in capacity coupling are equally important whether the magnetic coupling aids or opposes the capacity coupling. In the former case, an increase in capacity coupling will raise the gain of the transformer while in the latter case an increase in capacity coupling will reduce the gain of the transformer (except in the very rare cases where capacity coupling predominates).

If the transformer is at "critical coupling" and the magnetic and capacity couplings are "aiding," an increase in capacity coupling will merely decrease the selectivity, while if the couplings are "opposing," an increase in capacity coupling will increase the selectivity and reduce the gain.

In all of the above cases, the effect of increasing capacity coupling is described because transformers are ordinarily built with a certain irreducible minimum capacity and any changes must necessarily be additions.

Whether capacity coupling aids or opposes the magnetic coupling in a given transformer may be determined by inspection. If the coils are wound in the same direction, which is the usual case, the magnetic coupling opposes the capacity coupling if both grid and plate are connected to the same ends of their respective coils. Ordinarily both grid and plate are connected to the inside ends of the coils in order to keep the high-potential ends of the coils away from the hook-up leads passing the coil.

Special precautions and constructions are employed in building Meissner IF transformers in order to keep the capacity coupling uniform, so that transformers of uniform gain and selectivity characteristics may be provided. Fig. 9 shows fiber spacers used to hold flexible hook-up wires in a pre-determined place with respect to the coils, and Fig. 10 shows the "Perm-a-strut" construction employing rigid leads for maximum uniformity of capacity coupling.

Figure 9

In order to take advantage of the uniformity built into IF transformers by means of rigid leads, or leads held in place by means of spacers, it is essential that the grid and plate leads remain everywhere well spaced from each other Where the grid lead is brought out through the top of the shield, this is no problem, but where the high-potential end of the secondary is connected to a diode it is customary for both plate and diode leads to be brought out through the open bottom of the shield. In such cases, either two separate small holes in the chassis, well spaced, or one large (preferably 1" or larger) hole should be provided so that the leads may be well spaced from each other. **In no case should both grid and plate leads be run through one small hole together.**

Figure 10

Triple-tuned IF transformers, particularly output transformers where diode and plate leads both pass through the open end of the shield can, are particularly subject to gain and selectivity variations as a function of variation in capacity coupling.

As an example, in a particular triple-tuned output transformer where the plate and diode leads ran close together, it was found that in attempting to align the transformer, the middle circuit was effective as long as either the input circuit or the output circuit was out of tune, but as soon as both input and output circuits were aligned, the center circuit had a very peculiar action. If the gain of the transformer is plotted against the capacity of the middle circuit, a curve similar to Fig. 11 was obtained. From this it is seen that there is one adjustment (A) that produces an increase in the overall amplification of the transformer. At this point the center circuit is contributing to the selectivity of the transformer. At another point (B) the amplification through the center circuit opposes the capacity coupling from the input to the output winding and results in a considerable decrease in amplification. At all other settings of its tuning condenser, the center circuit is so far out of resonance that it has no effect upon the gain of the transformer, which for all practical considerations, may be assumed to be a double-tuned capacity-coupled transformer. When the capacity between the high-potential input and output leads was reduced to a very low value by keeping the leads in opposite corners of the shield can, the transformer behaved as a triple-tuned transformer should, with all three circuits effective.

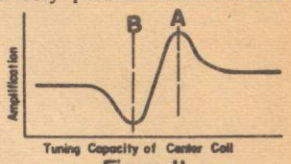


Figure 11

## TRACKING

Early models of radio receivers usually used only one tuned circuit per receiver, but as the number of circuits was increased to provide better selectivity, tuning a radio set became a problem beyond the grasp of the average citizen, and confined the sale of receivers to the "DX" hunter who spent innumerable midnight hours listening for new stations.

To make the receivers commercially more acceptable, simplifications in tuning were imperative. To this end, designs were produced that had a nominal single-dial control with an "antenna compensator" to produce maximum results. Such receivers were essentially single-dial control over a limited frequency range, but required an adjustment of the antenna compensator when passing from one end of the tuning range to the other. This simplification in tuning permitted general merchandising of radio receivers to the average citizen.

In order to make such receivers possible, it was necessary for the condenser manufacturer to produce tuning condensers with several individual condenser-sections on one shaft, in which, at any point in its rotation, the several sections of the condenser were practically identical in capacity, and the radio manufacturer was required to produce coils that had practically identical characteristics.

Given identical condenser sections and identical coils, it is obvious that the resonant frequencies of the several identical combinations of coils and condensers would be the same. In other words, such circuits would be self-adjusted to the same station and it would no longer be necessary to tune each circuit separately. In the language of the radio man, the circuits are said to "Track." These conditions made the single-dial control receivers possible.

As long as low-impedance magnetically coupled antenna circuits were employed, it was not possible to eliminate the "Antenna Compensator" since the size of antenna had considerable effect upon the tracking of the first circuit, but when high-impedance primaries were adopted on the antenna coil, true single-dial control with all circuits tracking became possible.

It is not to be understood from this that a high-impedance primary on the antenna coil automatically makes the coils track properly, for there are designs of high-impedance antenna coils that mistrack seriously. Neither is it to be inferred that a properly designed high-impedance antenna coil gave perfect tracking independent of antenna constants. A properly designed high-impedance antenna coil gives reasonable gain and tracks well enough that when trimmed to accurate tracking, the increase in sensitivity in the receiver is not greater than 30%.

In setting up the conditions for perfect tracking, the first requirement is identical circuits, the second is simplicity of circuit, the third is identical circuit inductance and capacity.

It is much simpler to track two RF stages of similar circuits and constants than it is to track an antenna and RF stage, and it is simpler to track two high-impedance circuits than it is one high-impedance and one low-impedance circuit.

The circuits which track most easily are those having the smallest number of circuit elements. The simplest possible circuit of an RF amplifier is shown in Fig. 12-A, which, for purposes of track-

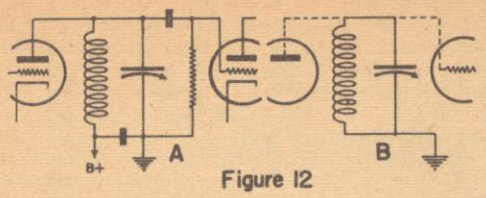

Figure 12

ing, is equivalent to Fig. 12-B. In this circuit there is one inductance tuned by one variable condenser, which condenser is assumed to include the grid and plate capacities. This circuit, in the broadcast band with the conventional capacity gang condenser, has entirely too much amplification, too much gain variation from one end of the tuning range to the other, and too little selectivity. Where the lack of selectivity and lack of uniform gain is not a serious problem, the gain of the amplifier can be reduced by tapping the coil to connect the plate somewhere near the middle of the

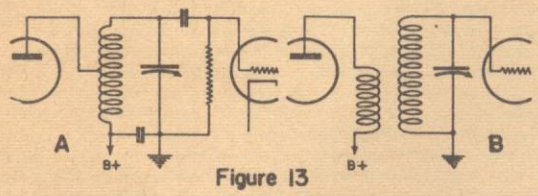

Figure 13

coil as in Fig. 13-A. In order not to have the plate voltage on the tuned circuit, a primary is usually wound on the coil, spaced between or exactly over the secondary turns, so that for all RF purposes, the plate is a tap on the secondary, but for DC is isolated. The RF coil now has a secondary tuned by the tuning condenser and is tightly coupled to the primary which has a very small capacity (plate and wiring capacity) across it. This arrangement permits the simple circuit of 13-B to be used. Such a circuit has two resonant frequencies, but for practical purposes the second resonant frequency is so high that it seldom causes any trouble, except in the case of certain high-frequency coils where the inductance of leads is comparable to the coil inductance.

The high-impedance primary type of RF coil has an inductance in the plate circuit many times higher than the inductance of the tuning coil. Such a circuit has two resonant frequencies, both of which are important. One is the frequency determined almost entirely by the secondary inductance and tuning capacity, and the other by the plate inductance and the plate capacity.

In Superheterodyne receivers, which almost universally employ an intermediate frequency lower than the broadcast frequencies, it is important to see that the primary-circuit resonance does not occur at the intermediate frequency, or the RF amplifier circuits will pass unwanted signals of intermediate frequency directly into the intermediate amplifier, even though the grid circuit of the RF amplifier is tuned to a frequency far removed from the intermediate frequency. This is particularly true of receivers employing an intermediate frequency just below the broadcast band, such as the 456 KC now so popular. On such receivers, the primary resonance should be placed either midway between the IF and the low end of the broadcast band, which gives high gain but leads to considerable production difficulties, or the primary resonance should be placed well below the intermediate frequency. The latter arrangement is highly recommended over the former because it is more uniform, causes less trouble from oscillation, and produces better tracking.

The presence of the primary circuit resonant below the low end of the tuning band has the effect of lowering the secondary inductance as the low end of the tuning range is approached. Fig. 14 shows the tuning curve for a high-impedance and a low-impedance RF circuit adjusted to have the same low-frequency inductance and the same maximum frequency. The low-impedance circuit is seen to follow the frequency curve calculated from the secondary inductance and total tuning capacity, but the high-impedance circuit does not follow this curve, departing from the calculated values at the low-frequency end. This point is brought out to show that two circuits may track perfectly over part of their tuning range and yet badly mis-track over another part due to resonances from some circuit not a part of the tuned circuit. From this it is easy to see that similarity of circuit is an aid in tracking.

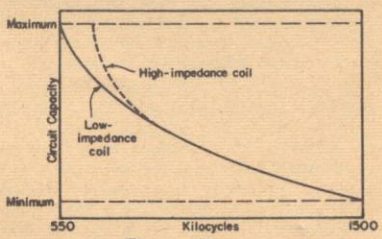

Figure 14

The amount the actual tuning curve of a high-impedance stage departs from the ideal curve depends upon two factors: the proximity of the primary resonance to the low end of the secondary tuning range, and the degree of coupling between primary and secondary. In the design of high-impedance coils, a reasonable limit on both of these factors may be assumed as follows: first, primary resonant frequency less than 80% of the lowest tuning frequency, but must not occur at the frequency of the IF amplifier in a superheterodyne receiver; second, magnetic coupling between primary and secondary should not exceed 15% coupling coefficient.

If the two circuits whose tuning curves are shown in Fig. 14 are to be tracked together, a series of compromises must be made. The tuning curves shown may be accepted as satisfactory, or a compromise may be made in the gain of the stage by moving the primary resonance farther away, with consequent reduction in gain, but resulting in a straighter tuning curve, or the inductance may be changed to make the low end mis-track less and the previously perfect tracking of the remainder of the tuning curve be less perfect. Such tuning curves are shown in Fig. 15.

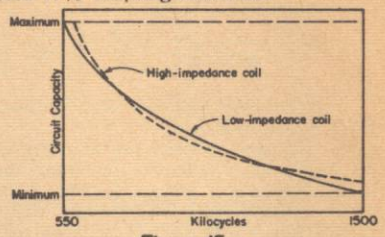

Figure 15

With the advent of superheterodyne reception, the problem of tracking became more complicated. The problem then became one of tracking one or more circuits to cover a given frequency range while another circuit (the oscillator) of different arrangement must maintain not the same frequency but a constant *frequency difference* in Kilocycles. Since the oscillator frequency is almost always above the signal frequency, and since the oscillator must cover the same number of Kilocycles from maximum to minimum, but cover them at a higher frequency than the antenna circuit, it is obvious that the oscillator covers a smaller frequency ratio than the antenna circuit.

In order to accomplish a restricted oscillator frequency-range compared to antenna frequency-range if no other restrictions were imposed, two methods are available; (1) Connect a fixed condenser across the oscillator. This reduces the capacity ratio by adding to the minimum capacity a much greater percentage than it adds to the maximum; (2) Connect a fixed condenser in series with the tuning condenser to reduce its maximum capacity without materially changing its minimum capacity. In actual receiver design, a combination of both types of compression is used, producing better average tracking than could be accomplished by either method alone. Formulas have been developed for calculating the values of inductance, padding and aligning capacities to be used to track an oscillator coil with a given antenna or RF coil, but unless there is access to a considerable amount of complicated test equipment, oscillator tracking must be accomplished experimentally with simple equipment.

## TRACKING REPLACEMENT COILS

Radio servicemen are frequently called upon to replace Antenna, RF or Oscillator coils that have failed either through corrosion, or because of the failure of some other component in the receiver, or because damaged by some outside agency such as lightning.

Usually the damage is confined to the primary of the coil, in which case very frequently a new primary can be installed in place of the old one.

If the primary is replaceable, the winding direction of the old primary should be noted before removing it so that the new one may be installed with its winding direction the same.

If the damaged coil is beyond salvaging by installing a new primary, or if the secondary has been damaged, it will be necessary to install a new coil and check its tracking with the remainder of the tuning circuits.

In order to permit replacement coils to be tracked rapidly and to eliminate the possibility of having removed too much inductance and thereby ruined the replacement coil, to say nothing of the hours of labor installing, checking, removing and altering the coil, etc., Meissner has developed "Universal Adjustable" replacement antenna, RF and oscillator coils which are provided with a screw-driver adjustment of inductance by means of a movable core of finest quality powdered iron. By means of this adjustment, it is as easy to add inductance as to remove it, and to quickly obtain the optimum value of inductance. A coil of this type is shown in Fig. 16.

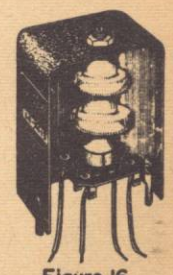
Figure 16

When a replacement antenna or RF coil is installed in a TRF receiver, the process of aligning is very simple. The dial is set to 600 KC, a dummy antenna of 200 mmfd. connected between the

high side of the service oscillator and the antenna connection of the receiver, an output indicator of some type is connected to the output of the receiver, the service oscillator tuned to the receiver and the screw adjustor in the top of the can rotated until maximum sensitivity is obtained. The receiver and signal generator are next tuned to 1400 KC and the circuits aligned in the usual manner by adjusting the trimmers on the gang condenser. The process should then be repeated in order to obtain the best possible alignment at both checking points. It is best to seal the inductance adjustment on the coil by the application of a satisfactory cement, such as Duco Household Cement or equivalent.

When replacing an antenna or RF coil on a superheterodyne, essentially the same practice is followed as above with the exception that, since the oscillator determines the dial calibration, if the adjustments thereon have been disturbed, it is necessary to readjust the oscillator circuit to agree with the dial calibration at the checking points before adjusting the inductance of the new coil or aligning it.

If a new oscillator coil is being installed, the greatest aid to rapid adjustment of the new coil to proper inductance is an *undisturbed padding condenser adjustment.* There are innumerable combinations of oscillator inductance, padding capacity, and trimmer capacity that will track an oscillator circuit at two places in the broadcast band, but these various combinations give varying degrees of mis-tracking throughout the remainder of the band. If the padding condenser has not been disturbed, one of these variables is eliminated, and, with only inductance to adjust for proper alignment at the low-frequency end of the band, and capacity to adjust at the high-frequency end of the band, the adjustment is practically as easy and rapid as installing and adjusting an antenna or RF coil.

If the oscillator padding condenser has been disturbed, it will be necessary to track the oscillator with the remainder of the receiver in the same experimental manner as used in the determination of the original design values. To arrive at a satisfactory alignment, the following experiment should be conducted systematically, *writing down* the answers obtained, so that the data does not become confused in your mind.

1. Align the IF amplifier at the frequency specified by the manufacturer.
2. Adjust the padding condenser to some value known to be much *lower* in capacity than its normal adjustment.
3. Set the dial and signal generator (of known accuracy) to 600 KC and adjust the oscillator inductance by means of the screw in the top of the can until a signal is heard. If no signal is heard within the range of the oscillator inductance adjustment, screw the adjustment as far in as possible and increase the padding capacity until a signal is heard.
4. Attempt to align the oscillator trimmer condenser to agree with the dial at 1400 KC. If the adjustment cannot be made, again increase the capacity of the padding condenser and reduce the inductance (by turning the screw out) of the oscillator coil to obtain a new setting at 600 KC. This process should continue until both 600 and 1400 KC are correctly indicated.
5. When both 600 and 1400 KC are correctly indicated, tune the receiver to the generator set at 1000 KC and make a *sensitivity measurement* which should be recorded.
6. Now increase the padding condenser capacity *slightly,* decrease the inductance to give a 600 KC signal, align at 1400 KC and again measure sensitivity at 1000 KC. If the sensitivity at that point is better than it was before, repeat this operation until the sensitivity measurements show greatest sensitivity and then start falling off again. If the steps in the process have been written down, recording the number of revolutions and fractions thereof on the adjusting screw of the inductance, it should be easy to return to the adjustment giving maximum 1000 KC sensitivity. When this adjustment is set, seal it with some satisfactory cement such as Duco Household Cement or equivalent and then give the receiver a complete alignment.

## ALIGNMENT OF RECEIVERS

Modern radio receivers employ from two up to eight, ten or even more circuits to achieve the selectivity desired. These circuits, however, are of little benefit unless all of them are working at their proper frequencies simultaneously. Only someone acquainted with the alignment of receivers in a radio production department, or someone engaged in radio service work who has adjusted a receiver on which someone has tightened all of the adjusting screws, can realize how dead a receiver can sound when all of its tuned circuits are out of adjustment any considerable amount.

The purpose of "Aligning" a radio receiver is two-fold — to adjust it for maximum performance, and to make the dial indicate within two or three percent the frequency of the station being received.

Since a trimmer adjustment is more sensitive when the circuit capacity is low, the trimmer adjustment is usually made near the high-frequency end of the tuning range. If the adjustment is made at the very end of the range, the maximum mis-tracking over the adjacent portion of the band will be greater than if an alignment point is chosen some small distance from the extreme high-frequency end of the tuning range. In the broadcast band, 1400 KC is the usual choice and is the frequency recommended as standard by the Institute of Radio Engineers. On shortwave bands on the same receiver, it is a good practice to align them at the same position of the gang condenser.

On a TRF receiver, all tuned circuits operate simultaneously at one frequency. When aligning a factory-built receiver, or a kit receiver having a dial calibrated to match the coils and condenser used, the dial is set to indicate the frequency of some signal of known frequency and the individual circuits adjusted to maximum performance on that signal at that setting of the condenser.

On a Superheterodyne receiver, circuits must operate at three different frequencies, properly related if satisfactory performance is to be obtained. Beginning with the circuits closest to the output tubes, the intermediate-frequency circuits must all operate at the same frequency in order to give satisfactory amplification. Actually they will work over a wide frequency range, but if they are operated very far from the intermediate frequency specified for the given dial, coils and tuning condenser, the dial indications will be in error more than the customary few percent and, in the case of receivers employing specially cut tracking plates in the oscillator condenser, serious mistracking of the oscillator with other tuned circuits will result, producing a loss in sensitivity and reduction in image-ratio.

The first adjustment on a superheterodyne receiver is therefore to align the intermediate-frequency amplifier at the correct frequency. Fortunately for satisfactory receiver operation, but unfortunately for the home set builder, there are no steady signals on the air at intermediate frequenceis to be used for aligning IF transformers. The IF transformers furnished by Meissner are aligned in the factory to the frequency specified in the catalog. If no equipment is available to furnish the proper aligning frequency, the transformers will be closely enough in alignment to pass a signal from a local broadcasting station when the complete receiver is operating. The transformers should be adjusted to give the strongest signal by adjusting, in turn, each of the adjustments on all of the IF transformers. As the adjusting screw is turned continuously in one direction, the output of the receiver will continue to increase up to a certain point beyond which the signal begins to fall again. By reversing the direction of rotation of the adjusting screws, each can be set for maximum signal output. As alignment proceeds, and the receiver becomes progressively more sensitive, the input should be reduced by retarding the setting of the sensitivity control, if the receiver has one, or by using progressively shorter antennas or merely short lengths of wire, or by tuning in weaker stations. The last expedient is not recommended unless all others fail, because in tuning in a new station the receiver may not be accurately tuned and it may be necessary to slightly retune all IF circuits.

When the alignment of the IF amplifier is completed, alignment of the RF and oscillator circuits should be made. If there is a signal generator or service oscillator available, it should be used as the frequency standard for alignment only if it is known to have an accurate frequency calibration. A manufacturer's statement of accuracy should not be assumed to hold for long periods of time especially if tubes have been changed in the oscillator. The accuracy can be quickly checked by beating the signal from the service oscillator against stations of known frequency using an ordinary radio set to receive both signals.

If the generator has an accurate frequency calibration, set the frequency to an appropriate frequency for the band to be aligned (all aligning frequencies are specified in Meissner Kit instruction sheets) which is usually about 80% of the maximum frequency tunable on that band, set the receiver dial to the corresponding frequency, connect an appropriate "Dummy Antenna" (see following section, "Dummy Antenna") between the high side of the signal generator output and the antenna connection of the receiver, turn the volume and sensitivity controls of the receiver full on, turn the generator up to high output and adjust the *Oscillator* trimmer until a signal is heard. Reduce the signal from the service oscillator as alignment proceeds always using as little signal input as possible because weak signals permit a more accurate alignment than strong signals.

Next align the RF amplifier circuit. On the bands below 6 MC the frequency of the RF amplifier circuit has very little effect upon the oscillator frequency, but at higher frequencies the adjustment of the RF circuit has a slight effect upon the frequency of the oscillator, and consequently it is necessary, when aligning a high-frequency RF amplifier, to rock the gang condenser very slightly as the alignment proceeds to be sure that a shift in oscillator frequency has not shifted the heterodyned signal out of the range of the IF amplifier. The antenna circuit is then aligned in the conventional manner.

Shifting the tuning dial to a point about 10% up from its low-frequency end, the oscillator circuit should be "padded" for best tracking with the antenna and RF circuits. If the radio set is sufficiently sensitive to produce a readily discernable hiss in the

speaker, probably the easiest way to pad the oscillator circuit is to adjust the padding condenser for maximum hiss or maximum noise. If the receiver is not sufficiently sensitive to align by the noise method, a signal of constant amplitude should be tuned in, and then as the padding condenser is turned continuously but very slowly *in one direction*, the gang condenser should be rocked back and forth to keep the signal tuned in. If the sound output is plotted against time, Fig. 17 shows the result of the above described operation. The padding condenser should be set as it was at point A, giving best sensitivity.

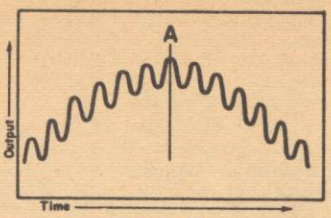

Figure 17

When this point is padded, it is well to return to the high-frequency end and realign that part of the band.

On coils operating in the frequency range 150 to 400 KC with an IF amplifier of 456 KC, the padding capacity is so important in the oscillator tuning scheme that the oscillator should be padded before the high-frequency alignment, and then the circuit aligned and padded at least twice.

Simple receivers can be aligned without instruments by tuning in stations of relatively constant volume, but it is a difficult problem to obtain optimum alignment on any kind of a signal except a constant tone. If the receiver to be aligned is complicated and no equipment is at hand for alignment, it would be well to take the receiver to a serviceman possessing adequate equipment and have him align the receiver.

## DUMMY ANTENNA

Receivers are aligned on signals furnished by a "Service Oscillator" or "Signal Generator" because that is the only method of obtaining truly satisfactory signals of constant tone, of adjustable strength, and of the desired frequencies.

In order to make allowance for the effect that the outside antenna will have on the alignment of the receiver, a substitute for the antenna called a "Dummy Antenna" representing the *average* antenna is used to connect the service oscillator to the antenna connection of the receiver.

On frequency ranges up to 1700 KC the average antenna is essentially a capacity of 200 MMF if used on a high-impedance primary. It has an inductance of a few microhenrys but this small inductance can be neglected except in the case of aligning receivers having a low-impedance primary or a Hazeltine low-impedance capacity coupling.

On frequencies above 1700 KC, the average antenna can be represented by a 400-ohm carbon resistor.

## SPURIOUS RESPONSES IN RECEIVERS

In the dawn of Radio Broadcasting, stations were few in number and limited in power. Receiving sets were likewise extremely simple, employing, as a rule, only one tuned circuit. As the power of transmitters was raised, receivers were no longer able to separate the undesired signal from those desired. Consequently, receivers of progressively greater selectivity were developed, adding tuned circuits for greater selectivity until high quality TRF receivers used as many as six tuned circuits, all ganged together and operating from one knob. The superheterodyne method of reception was then popularized, making possible a degree of selectivity never approached in the best of TRF receivers. Throughout the entire development, spurious responses were, and still are, an important design and service problem.

In TRF receivers, these unwanted responses might be divided into the following classes: cross modulation, adjacent-channel interference, and intercarrier 10 KC whistle.

With the advent of the Superheterodyne method of reception the following additional classes of spurious responses became evident: "tweets" at IF harmonic frequencies, simultaneous reception of two stations separated by a frequency difference equal to the IF frequency, reception of a station located above the dial-indicated frequency by a frequency equal to twice the IF frequency; reception of stations on or close to the intermediate frequency.

With the exception of "tweets" on stations which operate on a frequency corresponding to harmonics of the intermediate frequency, all of the remainder will respond to simple treatment to reduce or eliminate the trouble.

## SPURIOUS RESPONSES — CROSS MODULATION

"Cross modulation" in a TRF receiver is, by accepted definition, the modulation of any desired program by some undesired program several or more channels away. This can occur in spite of extreme overall selectivity because it is a function of the selectivity *preceding* the first tube.

In superheterodyne receivers, the term "Cross Modulation" is confined to those modulations which occur at some frequency **not related** to the desired signal **by some simple frequency relation involving the intermediate frequency,** such as, frequency of interfering signal being above the desired signal by a frequency equal to the intermediate frequency or twice the intermediate frequency. These special frequencies are classed as "Image frequencies," and are treated under a separate heading.

"Cross Modulation" is accentuated by the following design features in receivers: (1) A sharp cut-off tube such as a type 24 tube as the first tube in the receiver, (2) lack of selectivity ahead of the first tube, (3) an antenna circuit with a primary resonant near the frequency of a local station when connected to an antenna of proper constants, (4) antenna circuits with extremely close coupling, (5) antenna circuits of very high gain. All of these troubles are caused by having too large a signal of undesired frequency present on the first grid simultaneously with the desired signal. The actual modulation occurs in the first tube after which no amount of selectivity can remove the interfering modulation.

The cure for such trouble is either to use a first tube which has less tendency to cross modulate, such as a variable Mu remote cutoff tube, or to reduce the amount of interfering signal by any one of the following means: (1) Install an appropriate wave trap such as shown in Fig. 18 over A, tuned to the frequency of the interfering station. (2) If the primary circuit is reasonant near the frequency of the interfering stations, change the resonant frequency by a 100- to 200-mmfd. condenser connected either in series with the antenna or connected between the antenna and ground posts of the receiver (3) Shorten the antenna, if long. (4) If a low-impedance antenna coil is used and the interfering station is at the high-frequency end of the dial, install a new antenna coil with high-impedance primary. (5) Connect a resistance across the antenna and ground terminals of the receiver using a value satisfactory for reducing the effect, usually 1000 to 3000 ohms.

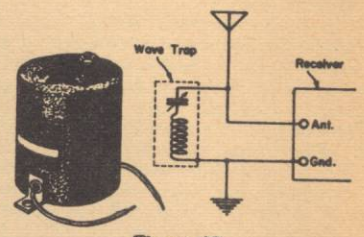

Figure 18

## SPURIOUS RESPONSES — ADJACENT-CHANNEL INTERFERENCE

"Adjacent-Channel Interference" is closely related to the adjacent-channel selectivity of a receiver. If insufficient for certain locations and selections of stations, selectivity may be improved by the use of better coils, but in TRF receivers the effort probably does not justify the expense of obtaining new coils of higher "Q" that track properly. In superheterodyne receivers, the adjacent-channel selectivity can easily be improved by installing new IF transformers having greater selectivity than those previously in use. Here no tracking problem is present and standard stock IF transformers may be used. If the original transformers had only fair selectivity, it is recommended that iron-core transformers similar to that shown in Fig. 9 be installed. If the original transformers have good selectivity but still higher selectivity is desired, install triple-tuned IF transformers similar to that shown in Fig. 19. In the latter case, the additional tuned circuits will add selectivity faster, and with better audio quality, than will iron-core IF transformers.

Figure 19

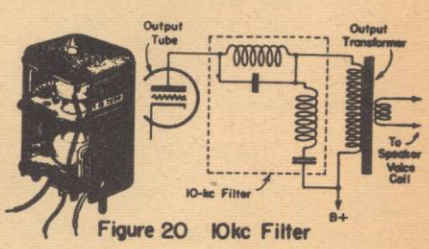

Figure 20 10kc Filter

## SPURIOUS RESPONSES — INTER-CARRIER 10 KC WHISTLE

Inter-carrier 10 KC whistles can be suppressed either by increasing the selectivity of the receiver or by filtering out the objectionable 10 KC note. By far the most convenient and economical method is to install a 10 KC filter such as shown in Fig. 20. It will be immediately apparent upon inspection of the circuit diagram, that this filter consists of two tuned circuits, one resonant and one anti-resonant, giving unusual attenuation of the 10 KC interfering note. The constants of the filter have been chosen to permit the audio response to carry out flat very close to 10 KC before the filter begins

to attenuate seriously. When the filter does begin to attenuate, however, the output drops very rapidly as 10 KC is approached.

## SPURIOUS RESPONSES — IMAGE AND HARMONIC INTERFERENCE

A few superheterodyne receivers have complaints on Cross Modulation, but usually complaints of interference on such receivers are closely tied up to the heterodyne operation and the interferences occur between stations separated by a frequency equal to the intermediate frequency, twice the intermediate frequency or some fractional multiple of that frequency.

Where two local stations, separated by a frequency equal to the intermediate frequency, are observed to ride in on almost any weak program, or to come through simultaneously when the oscillator is blocked, one is acting as the heterodyne for the other to produce the intermediate frequency. The remedy for such trouble is to install a wave trap tuned to the stronger of the two stations; a second method, but one which disturbs tracking and dial calibration, is to re-peak the IF transformers on a new frequency, far enough from the frequency difference between the two local stations to avoid the trouble. Depending upon conditions, the shift may vary from 10 to 25 KC either above or below the original frequency. Receivers having oscillator padding condensers should be repadded and re-aligned. This treatment is not recommended where receivers have specially cut oscillator plates on the gang condenser for purposes of tracking.

"Image interference," which is by far the most important type of superheterodyne interference, is that interference which is produced by a station located above the desired station by a frequency difference equal to twice the intermediate frequency.

The cause of image interference is that the heterodyne principle works on a frequency difference, irrespective of whether the desired signal is below or above the oscillator frequency. The first detector tube cannot recognize and differentiate between signals above and below oscillator frequency. If the frequency difference is correct, the first detector produces an IF signal. The selection of the signal frequency (usually below the oscillator frequency) and the rejection of the image frequency (usually above the oscillator frequency) is the function of the tuned circuits ahead of the first detector. The ordinary types of receivers have only one tuned circuit ahead of the detector with consequently poor image ratio. Commercially good receivers have two tuned circuits, producing much higher image ratios. A few very high class receivers have three tuned circuits producing a *measured* image ratio far better than most such receivers are capable of producing when operating on a broadcast signal rather than operating from a signal generator because of inadequate shielding.

In general, the image rejection is a direct function of the "Q" of the antenna and RF circuits and of the number thereof, but there are a few receivers employing special schemes to improve image response at certain points in the band.

Generally, image ratio is a built-in function of the receiver that it is not economical to change by the addition of tuned circuits or improvement in coil design.

Where "Image" interference is experienced from only one local station, a wave trap can be connected to remove that interference. If, as is sometimes the case, the desired station is an important out-of-town station and the interfering image station is a powerful local transmitter, it may be necessary to employ a double wave trap such as shown in Fig. 21 which gives extreme attenuation to a narrow band of frequencies.

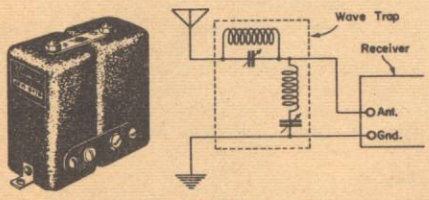


**Figure 21 Dual Wave Trap**

In some cases, where it is permissible to alter the calibration of the receiver slightly, image trouble between a definite pair of stations can be eliminated by shifting the intermediate frequency, but such treatment merely shifts the image interference to another station.

## SPURIOUS RESPONSES — IF HARMONIC "TWEETS"

"Tweets" on harmonics of the intermediate frequency can best be eliminated by shifting the intermediate frequency. Admittedly, this treatment merely moves the interference from one to another station but, in general, the problem of attenuating IF tweets is so complex that the work of eliminating them is not justified unless the results can be applied to a large number of similar receivers. Usually, moving the intermediate frequency to shift the tweets to another station is the only economical correction to apply.

## SPURIOUS RESPONSES — IF INTERFERENCE

Reception of undesired stations on or near the intermediate frequency is caused by inadequate attenuation to IF ahead of the first detector. Usually, two-gang superheterodynes only are troubled with this type of interference, but occasionally even three-gang receivers will exhibit this type of trouble when close to such interfering stations. The usual remedy is the use of a wave trap of the type shown in Fig. 18 which may be adjusted to the intermediate frequency of the receiver if the interference is weak, or the use of a two section trap similar to the two section image trap illustrated in Fig. 21 if the interference is bad.

## REGENERATION AND OSCILLATION

In the design and construction of radio receivers, employing either a limited number of amplifier stages with very high gain per stage, in an attempt to obtain the greatest possible sensitivity and selectivity from a given investment in parts, or in the design of a super-sensitive receiver having a multiplicity of conservatively designed stages, one of the limiting factors in the direction of extreme sensitivity is regeneration, which, when extreme, results in oscillation.

Regeneration is the process of building up a voltage by re-amplifying a voltage that has already passed through an amplifier. It is caused by feeding back a voltage from one point in an amplifier to some preceding point **working at the same frequency.**

Regeneration is usually present in some degree in all receivers, sometimes by design and sometimes by accident. When limited to a relatively small amount, it is useful and can be handled in quantity production of receivers with a fair degree of uniformity, but when employed in large amounts, the production variations between receivers is apt to be quite large, because regeneration tends to exaggerate relatively small differences in individual set components. In addition, receivers employing large amounts of regeneration will usually exhibit far greater changes in sensitivity, as a function of humidity variations, than will sets with little regeneration.

Normally, in domestic broadcast receivers, whatever regeneration there is has been limited by design constants to a value that will not cause trouble, and therefore no control is provided to be set by the user. In amateur receivers, controlled regeneration is employed to accomplish amazing results in the hands of an experienced operator attempting to obtain the maximum possible performance from the minimum of equipment. Usually in such cases the regeneration control is second in importance to the tuning control, requiring readjustment as soon as the receiver dial is moved an appreciable amount.

From the above it is not to be concluded that regeneration, of itself, is undesirable, because it can, if judiciously used, add a great deal to the performance of a receiver. What is to be concluded, however, is that in the design of a receiver, the amount of regeneration present under the best and worst operating conditions should be determined, and the regeneration limited to an amount that is safe for the type of service for which the receiver is intended.

In receivers which have not been properly checked for regeneration, conditions sometimes exist that permit the receiver to regenerate until sustained oscillations result under certain weather, tuning, or antenna conditions, or when receiving signals below certain strengths.

Regeneration may be broken down into two general classifications even though fundamentally the cause is the same. These two classes are single-stage regeneration and over-all regeneration.

## SINGLE-STAGE REGENERATION

Single-stage regeneration in amplifiers is usually the least understood type of regeneration trouble and frequently has baffled many service men and radio experimenters. It is peculiar in that no amount of isolation and filtering applied to screen, cathode, plus "B" or grid return seems to make any improvement.

The feedback actually occurs inside of the tube in the stage that is giving trouble. The coupling exists between grid and plate through the inter-electrode capacity of the tube or any additional stray capacity between these two points. To some, this may seem unreasonable when the inter-electrode capacity is as low as .01 mmfd. or less, but it is an actual fact that is easily proven.

When single-stage oscillation is suspected, raising the grid bias will stop the regeneration, but so will this change stop over-all regeneration. The true test for this phenomena is to connect a milliammeter (properly bypassed) in the plate circuit of the suspected tube as shown in Fig. 22. Remove the preceding and following tubes, and then place an intermittent short-circuit on either the grid or plate circuit of the suspected stage while watching for changes in the plate current in that tube as an indication of the starting and stopping of oscillation. The tube and associated tuned

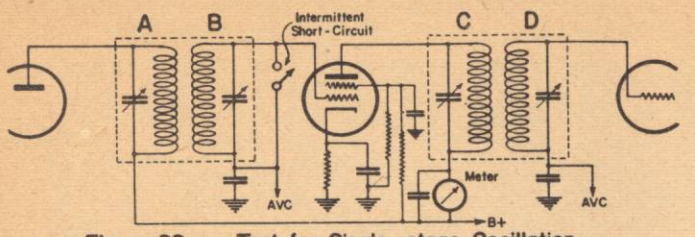


Figure 22 Test for Single-stage Oscillation

circuits form a tuned-grid-tuned-plate oscillator similar to a transmitting circuit that was very popular in the early days of vacuum tube transmitters.

The standard cures for this trouble are:

(1) Use a tube with lower inter-electrode capacity.

(2) Neutralize the inter-electrode capacity.

(3) Reduce the gain of the circuit by raising the tube bias.

(4) Reduce the value of the resonant impedance in either grid or plate circuits, or possibly both. This may be done by using coils of lower Q, or coils of the same Q but lower inductance, or by tapping one or both of the tuned circuits so that only a portion of the resonant impedance is introduced into the grid or plate circuit.

This type of oscillation is not confined to intermediate-frequency amplifiers but is encountered in RF amplifiers as well, if the primary is closely coupled to the secondary (as most shortwave RF primaries are) and has too many turns in an attempt to obtain high RF stage gain. In such cases it is necessary to reduce the number of primary turns until single-stage oscillation stops.

A peculiar effect may have been observed by some experimenters that they have never been able to explain, which can be understood when considered in the light of single-stage regeneration. This phenomenon is that a given amplifier stage may be stable when lined up properly, but will be unstable and oscillate when one or two of the associated circuits are misaligned. This phenomenon may have been observed accidentally and has not been reproduceable because the reasons were not understood. Referring to Fig. 22 it will be seen that the resonant circuits are lettered for easy identification. Consider that the middle tube is the offender, but with all circuits aligned it refuses to oscillate or give any other evidence of misbehavior. If circuit A is progressively misaligned in one direction and circuit D progressively misaligned in the opposite direction, single-stage oscillation will soon result. The same results can be accomplished on variable coupling IF circuits, that are mechanically variable, if the coupling is progressively reduced. The explanation is the same in both cases, but is accomplished by a different agency. In both cases the impedance of circuits C and D rises until single-stage oscillation occurs through the inter-electrode capacity of the tube. The explanation for this statement is given here below.

When a single circuit is resonant it presents a definite resonant impedance that is a direct function of its "Q" and its reactance. If another similar circuit, similarly resonant to the same frequency, is coupled to the first circuit, and set near "Critical Coupling" the resonant impedance of the combination approaches half the impedance of either circuit separately. It is this loading effect that keeps the impedance down when all circuits are aligned, and the absence of which, when circuits A and D are detuned, that permits the impedance of circuits B and C to climb high enough to cause single-stage oscillation.

## OVER-ALL REGENERATION

Over-all oscillation is a familiar complaint on multi-stage TRF receivers even of good design, and on IF amplifiers of high gain. On experimental receivers in the process of development it may be produced by any one of a number of causes. Only by experiment can the offending source of coupling be discovered and removed. It may be of two general types, high-impedance or low-impedance, or might be considered voltage feedback and current feedback although all feedback phenomena in radio receivers are, strictly speaking, voltage feedback phenomena.

Coupling between antenna and grid or plate leads, and couplings between grid leads or plate leads, etc., all of which are relatively high voltages impressed on the very small capacities existing between the points just mentioned are classed as high-impedance feedbacks. Appropriate partition type shielding quickly stops this type of feedback.

Under the heading of low-impedance feedbacks are placed all oscillation troubles resulting from the use of common cathode, screen or plate bypass condensers, common leads in high-frequency circuits, couplings resulting from the common shaft of a gang condenser, etc. Eliminating oscillation from these sources requires a study of the receiver and many experiments, isolating the various circuits that are suspected of causing the feedback, until finally the real offender is discovered.

Sometimes feedbacks are degenerative instead of regenerative and the disconcerting fact may be discovered in some cases that isolation of certain circuits increases rather than decreases oscillation troubles.

On manufactured receivers made by a reputable company which attempts to keep uniform quality, over-all oscillation after some time in service can usually be quickly traced to some circuit element that changes characteristics with age. For example, if no paper condenser is used across the electrolytic filter condenser to insure a permanent low-impedance RF path to ground, over-all IF oscillation can occur when the RF resistance of the electrolytic filter condenser increases with age.

In TRF receivers, frequently high-resistance contacts between the gang condenser shaft and the wipers causes over-all oscillation which can be eliminated by a thorough cleaning of the contacting surfaces. Common bypass condensers also should be suspected as the cause of feedback. When they are, they are usually found very easily by connecting a known good condenser across each bypass condenser successively until the defective unit is found.

## INTER-ELECTRODE CAPACITY

It has been pointed out, in the section on Single-Stage Oscillation, that the coupling medium for such oscillation is the inter-electrode capacity of the tube.

The method of measuring such small capacities in the presence of much larger capacities in a network that cannot be opened to measure the desired capacity directly may be of interest.

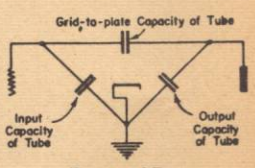


Figure 23

Fig. 23 represents the capacity network that exists in the tube as far as feedback capacities are concerned.

The method of measurement is to have a similar network, Fig. 24, in operation, supplying a voltage to some measuring device and fed by a source with the proper characteristics. The output capacity

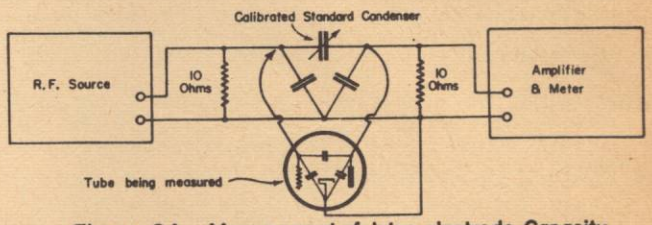


Figure 24 Measurement of Inter-electrode Capacity

of the tube is connected across the measuring circuit and a reading obtained on the output meter; then, when the grid of the tube is connected to the source of voltage, there will be an increased reading on the meter. The calibrated condenser is then reduced in capacity until the meter reads as before. The inter-electrode capacity of the tube is the difference in the capacity of the calibrated condenser at its two settings.

The calibrated condenser for the above measurement is an elaborate device not available to the experimenter or service man, therefore the above method of checking inter-electrode capacity cannot be attempted, but a very similar method can be used to check the uniformity of inter-electrode capacity in the manner shown in Fig. 25. Here a signal generator or service oscillator is used to

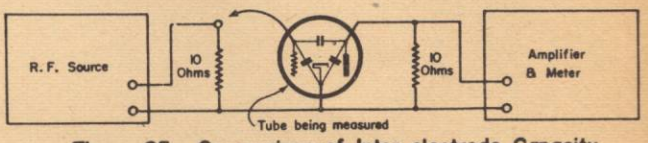


Figure 25 Comparison of Inter-electrode Capacity

furnish a signal to a low-impedance load so that the input-impedance of a tube may be connected across it with negligible change in voltage. The inter-electrode capacity feeds the signal into the radio receiver across whose input a low-impedance load has been connected so that variations in the output capacity of the tube will be swamped out. An output meter on the receiver will serve to indicate the relation between tubes of differing inter-electrode capacity.

The above system for comparing inter-electrode capacities has been successfully used in a number of laboratories desiring checks on inter-electrode capacity but which were unable to purchase complete equipment for making these measurements. It probably is not a measurement that any service man will have occasion to use, but some advanced experimenters, attempting to obtain the maximum possible performance from circuits, may desire to check their tubes for this parameter.

## FIDELITY vs. SELECTIVITY

One of the most frequent requests from experimenters working on high-fidelity receivers is for IF components that will permit high-fidelity reception, yet have good adjacent-channel selectivity.

The following considerations will show that it is impossible to meet both specifications simultaneously. In order to transmit a single audio frequency by the double sideband transmission method which is standard on all types of broadcast and shortwave entertainment transmissions, a carrier and two additional frequencies are required. These additional frequencies are located one above and one below the carrier frequency by an amount exactly equal to the audio frequency. For example, if it is desired to transmit a 10 KC note on a 1000 KC carrier, the upper sideband will be 1010 KC and the lower sideband will be 990 KC. It can be shown mathematically and it can actually be demonstrated that in the above case three separate signals exist, if a sufficiently selective receiver is used for the demonstration. Since it is the American practice to assign broadcasting frequencies at 10 KC intervals, it is obvious that the 10 KC transmission of the 1000 KC station above mentioned will fall exactly on the carriers of the two adjacent channels and will produce heterodynes that will give rise to spurious audio responses in any receiver having a selectivity curve wide enough to pass both sidebands on a 10 KC modulation.

Since it is reasonable to assume that there will be modulation on both adjacent channels it will be obvious that the transmissions of the two adjacent channels will encroach upon the territory that the 1000 KC station is using if it modulates up to 10 KC. Now if all three stations are producing a signal of equal intensity and are all modulating up to 10 KC the receiver will not be able to separate these three programs. If, however, the pass-band of the receiver is narrowed down until it accepts a band of frequencies only 4 KC above and below its mid-frequency, it will accept from the adjacent channels only those frequencies above 6000 cycles which frequencies carry a comparatively small part of the energy of speech or music and consequently will not interfere with the desired program to as great an extent.

If the ratio of desired signal strength to adjacent-channel strength is now changed so that the desired signal is many times stronger than the adjacent channel signal strength, the pass-band of the receiver can be increased considerably without introducing appreciable interference.

From the above it can be seen that "High-Fidelity" reception can be used only where the ratio of desired signal to adjacent-channel signal is very great, say 1000 times or more, and that, unless the receiver is confined to the reception of local stations, it must be able to sharpen its selectivity curve when it is desired to select one station whose signal strength is near or below the signal strength of the adjacent channels. In order to accomplish this economically, IF transformers, whose physical and electrical features are shown in Fig. 26, are available. In these transformers, the pass-band is varied

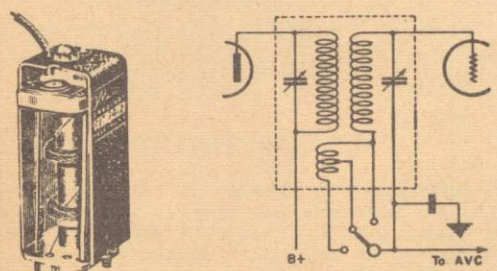


Figure 26

by changing the coupling between primary and secondary, by means of a tapped coil in series with one winding closely coupled to the other. By this arrangement a very high percentage change in coupling can be accomplished with practically no change in the self-resonant frequency of the tuned circuit which has been switched. This arrangement permits one receiver to be adjusted for either wide or narrow pass-band instead of requiring two independent receivers of the desired characteristics.

## DISTORTION IN DIODE DRIVER STAGES

When a diode detector must work at reasonably high levels, as in the case of feeding a low-gain audio system such as a type-55, -85 or -6R7 tube working a push-pull stage through a transformer, considerable energy is required by the diode and its load resistance.

If the gain of the diode driver tube is varied by means of the conventional AVC circuit wherein full AVC voltage is applied to all controlled tubes, it may be found that very serious distortion is produced at high signal levels. If such distortion occurs, it is probable that the last IF tube is not able to furnish the power output required to properly drive the diode circuit when this IF tube has a relatively high bias. The quick test for this trouble is to remove the AVC voltage from the last IF tube and hold its bias constant at its nominal minimum value while the receiver is again checked for distortion. If the above test eliminates the distortion, that tube may be left without AVC or may have applied to it only a fraction, usually ¼ to ½ of the voltage that is applied to the remaining tubes.

## MICROPHONICS

In the original design of receivers one of the most exasperating and illusive problems confronting the radio engineer is that of preventing "Microphonic Howls." First-class radio manufacturers usually do everything economically practical to minimize this trouble but, even in spite of these efforts, this trouble still produces many service calls.

The cause of the trouble is easily understood, but finding the offending item is usually a difficult job with many apparently correct answers proven wrong before the real offender is found. Often when one source of trouble is eliminated another shows up.

The most powerful tool for the solution of such a problem is the combination of audio oscillator, audio amplifier, output meter and unmodulated signal generator. Fig. 27 shows the arrangement of parts for the test.

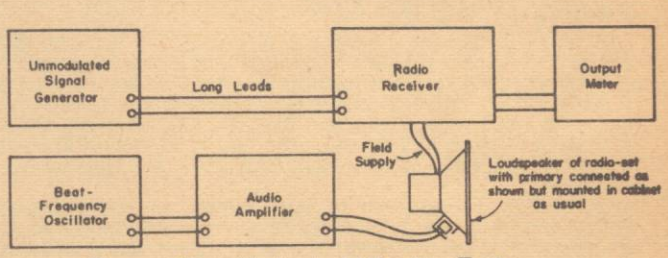


Figure 27 Mechanical Vibration Test

The receiver is tuned to the signal generator using modulation on the generator, if necessary, to properly tune the receiver. The modulation is removed without disturbing the tuning of either generator or receiver and the beat frequency oscillator is started, putting into the speaker an output approximately equal to the full output of the receiver. As the beat frequency oscillator is run over the audio range from 60 to 5000 cycles slowly, various sharp peaks will be noticed on the output meter. This audio output from the receiver is caused by the mechanical vibration of some part of the receiver modulating the CW carrier supplied by the generator. The actual means of modulation may be the vibration of a condenser changing capacity in time with the vibration to produce capacity modulation of a tuned circuit, or vibration of a coil or coil lead may give inductive modulation of the tuned circuit, or vibration of the elements in the tube itself may give direct modulation of the electron stream. Whatever may be the modulating element, the best chance of locating it quickly is provided by the above setup. The beat frequency oscillator is set to the frequency giving the greatest reading on the output meter and a search is made for the element producing this modulation. If the source is found, some means usually can be found to eliminate or reduce the trouble.

As the frequency to which the receiver is tuned increases, the percentage change in frequency necessary to produce howling becomes increasingly smaller. In the shortwave range the stability required to eliminate howling is so great that it is practically impossible to eliminate all howling on high volume. In many cases, shortwave receivers with the speaker in the same cabinet with the radio set cannot be operated at full volume. Receivers have even had their oscillator coil and oscillator tuning condenser poured full of wax to prevent vibration and still could not be kept from howling at high volume on shortwaves! Service problems of eliminating microphonic howls should be undertaken with due consideration of the difficulties involved and of the impossibility of producing a 100% permanent cure if the receiver has a shortwave range and has its speaker in the same cabinet with the receiver.

A BRIEF THEORETICAL DISCUSSION OF

# RECEIVING ANTENNAS

## GENERAL

The types of antennas which are of principal interest today are those known as resonant antennas, and are used principally in the FM and TV bands. Other types of resonant antennas are used for amateur and commercial communications, but have been covered so thoroughly in other publications that they will not be discussed here.

The Broadcast band has become so crowded with stations that in general only local stations can be depended upon for interference free reception. Since they are local stations, no elaborate antenna installation is required, and usually a plain straight wire is used for Broadcast band reception, or if the receiver is equipped with a loop antenna, no outside antenna is used at all.

As we shall see later under the discussion of 'Ghosts' and also under the discussion of antenna bandwidths, the principal difference between the requirements for FM and TV lies in (1) the accuracy of transmission line matching and termination (far greater accuracy is required for TV), and (2) in the bandwidth characteristics of the antenna. We can therefore discuss FM and TV antennas at the same time since the same principles apply.

As mentioned elsewhere in this Manual, the transmission characteristics of the atmosphere to waves above about 40 mc is such that these frequencies can be relied upon to cover only slightly greater distance than the optical or direct line of sight distance between the transmitting and receiving antennas. Actually these waves do not travel in a direct straight line, but the path is bent slightly around the curvature of the earth as the wave travels through the atmosphere, and so will cover a slightly greater distance than the line of sight distance before extreme attenuation sets in. This does not mean that no signal can exist beyond the line of sight. Although the wave suffers high attenuation beyond this distance, some field strength does exist and under some rare conditions, both TV and FM signals have been received at distances considerably greater than the line of sight distance. It appears that the amount of 'bending' effect changes with the condition of the atmosphere, causing very erratic reception in those 'fringe' areas which lie beyond the line of sight distance.

It is a good working rule that dependable reception of either FM or TV cannot be obtained over distances greater than 40 to 50 miles from the transmitter. This, of course, varies depending on the exact nature of the terrain in any given locality, and in fringe areas the dependability of reception can only be determined by experiment. It follows of course from the line of sight transmission theory that in fringe areas the antenna should be located as high as possible. The height referred to is the actual height above sea level, not necessarily the height above the ground.

GHOSTS IN TV RECEPTION, that condition which causes one or more weaker images to be received, displaced to the right of the main image, can be caused by two things: (1) Reception of the signal over two or more different reception paths which differ in length; and (2) Reception of multiple signals at the receiver itself, all arriving at slightly different times, due to reflections in the transmission line.

In analyzing the cause of ghosts, we should first have a look at the speed at which TV (or radio) waves travel in space, and also at the speed which the cathode ray spot travels on the face of the picture tube. We know that radio waves travel at a speed of 300,000,000 meters per second in free space. Converting this to the distance per microsecond we get 300 meters per microsecond, and converting meters to feet we get approximately 984 feet per microsecond. Now let us have a look at the speed of the cathode ray spot on the face of the picture tube and the distance it will travel in one microsecond. If we look at the specifications for scanning time in a TV receiver, we find that we scan 15,750 lines per second, which corresponds to a time of 63.5 microseconds per line. In each line approximately 10.5 microseconds are used up by blanking pulses and retrace time, leaving 53 microseconds of each scanning line for actually tracing the picture. If we take a 10 inch tube with a picture width of 10 inches, then we scan one line 10 inches long in 53 microseconds, or we scan .189 inches per microseconds. For the sake of simplicity we will say we scan 3/16 inch per microsecond. In summation, we have found that the picture signal travels 984 feet while the scanning spot on the picture tube is traveling 3/16 inch. Now let us assume that we are receiving a TV signal from a transmitter antenna located 5 miles distant or 5 X 5280 - 26,400. Let us also assume that we are receiving not only the signal which travels directly from antenna to antenna but that we are receiving the same signal via another path as a result of the signal being reflected off a tall building, and that the path of this signal is 32,300 feet or 5900 feet longer than the path of the direct signal. Since this reflected signal travels 5900 feet farther than the direct signal and since it travels 984 feet per microsecond, then it will arrive at the receiving antenna 6 microseconds later than the direct signal. Since during this 6 microseconds the scanning beam will have traveled 6 X 3/16 inch or 1-1/8 inches, we will have a secondary or ghost image of the picture displaced 1-1/8 inches to the right of the direct image on the face of the picture tube. The only means of eliminating this type of ghost image is to make use of the directional characteristics of the receiving antenna to reduce the signal from the undesirable path to a point where it is not objectionable.

The second cause for ghosts in TV receivers arises from improper impedance matching of the antenna to the transmission line, or the transmission line to the receiver. If improperly matched, the signal will be reflected from the receiver back to the antenna and back to the receiver again where it arrives at a time (depending on the length of the transmission line) later than the original signal and appears as a ghost. This form of ghost cannot be displaced from the main picture nearly as much as in the previous case because of the relatively short length of the transmission line, and usually appears not as a displaced image but appears so close to the main image that it produces a 'fuzzy' picture instead of a completely separate image.

## ANTENNA CONSTRUCTION

In the construction of antennas for FM and TV, the dipole antenna is the basic unit from which most of the complex arrays are made. A dipole consists of two quarter wave antennas mounted end to end, but not connected to each other in the center. The transmission line is connected to these adjacent or the inside ends. The dipole antenna is balanced to ground and should be used with a balanced transmission line, although some commercial antennas which have been entirely successful in the field have used unbalanced (coaxial or concentric) transmission lies with balanced antennas with no serious ill effects. The approximate impedance of a half wave dipole is 72 ohms. It has been determined by practical experience that if the transmission line is terminated at the receiver end in the correct impedance that no serious ill effects will result other than a very slight loss in efficiency if the line is mismatched to the antenna by as much as 2 to

1. This is an important point to note when working with some of the more complex antenna arrays which have odd values of impedance for which no transmission line of the correct impedance is available commercially. While it is possible to have considerable mismatch between the antenna and transmission line without any serious ill effects, matching between transmission line and receiver is more critical and every effort should be made to use a transmission line of the correct impedance to match the receiver input. We have seen, under the discussion of ghosts, that the effect on the picture of a mismatch at this point can cause 'fuzzy' or 'smeared' pictures.

In the selection of a transmission line it should also be observed that some receivers have balanced input, in which case a balanced line should be chosen if possible; and other receivers have unbalanced input, for which an unbalanced (coaxial) line should be chosen. In the event that it is impractical to choose an antenna, a transmission line, and receiver all of which fit into such a matching pattern, then matching transformers are available in models which will match practically any transmission line to any receiver. These transformers provide not only for correctly matching the impedance but also for going from an unbalanced line to a balanced receiver or from a balanced line to an unbalanced receiver.

Transmission lines for FM and TV are readily available in impedances of 52 and 72 ohms for the unbalanced type, and in impedances of 72, 150, and 300 ohms in the balanced type.

In some arrays various matching methods are used to make the impedance at the transmission line terminals different from the natural impedance of the antenna itself in order to correctly match a commercially available value of transmission line impedance. The correct length for a half wave dipole at any one frequency is exactly a half wavelength long only if the antenna elements are of very small diameter and if the antenna is mounted in free space with no objects in its field which would cause losses. In actual practice this condition is never achieved and a more practical length for the antenna is shorter than the theoretical length. A good workable length under most conditions is 95% of the actual half wavelength. In considering the impedance of the half wave dipole as 72 ohms, one can assume this impedance to be purely resistive at only one frequency. At frequencies higher than the natural frequency, the resistance becomes lower but the reactive component which is inductive goes up and the impedance is principally reactive and may be several times higher than the 72 ohm resistive component at resonance. At frequencies lower than the natural frequency of the antenna the same thing happens except that the impedance becomes principally capacitive instead. This principle has been used extensively in order to more perfectly adjust antennas to resonance in any location. The antenna may be cut shorter than necessary for a given frequency in order to make the impedance at its terminals appear capacitive, then tune this capacitive component to resonance with a small inductance placed directly across the transmission line terminals. Or the antenna may be cut longer than necessary for the required frequency in order to make its impedance appear inductive and tune this inductive component to resonance by the addition of a small capacity. The inductances and capacities used for tuning in the above cases are usually obtained from an approximate quarter wave section of transmission line shorted at one end and connected across the antenna terminals at the other end. Such a line, if less than a quarter wavelength, presents an inductive reactance to the antenna and if greater than a quarter wavelength, presents a capacitive reactance to the antenna. The magnitude of this reactance depends on how far from an actual quarter wavelength the line actually is, and is greatest at a length corresponding approximately to a quarter wave plus 20% and a quarter wave minus 20%. When tuned in this manner the antenna impedance is resistive at the transmission line terminals but may be several times higher than the original antenna impedance. In order to correctly match the impedance of the transmission line, the line is usually attached to the quarter wave matching stub at a point close to its shorted end which will give the correct impedance. In this case the quarter wave matching stub is used not only as a tuning element to tune the antenna to resonance at the required frequency, but also as an impedance matching device to properly match the higher impedance of the antenna to the lower impedance of the line. Such systems are rather difficult to adjust properly, and adjustment should not be attempted unless proper measurement facilities are available.

As mentioned before, the impedance of a half wave dipole is a pure resistance only at one frequency. If the diameter of the elements is quite small, then the impedance is very critical to frequency and changes quite rapidly as the frequency departs from the actual frequency of the antenna, but if the diameter of the antenna elements is relatively large, then the resistance changes much more slowly as the frequency is changed, and remains fairly constant over a much wider frequency range. For this reason, antennas have been developed having elements of quite large diameter (as large as 1/20 wavelength). Also, various types of conical shaped elements, fan shaped elements, and various kinds of loading rings have been used for the purpose of increasing the effective diameter of the elements. For dipoles having elements of very large diameter, the length corresponding to 95% of a half wavelength no longer holds, and the correct length becomes as short as 75% of a half wavelength.

THE FOLDED DIPOLE: A commonly used variation of the dipole antenna is the folded dipole, which consists of two half wave dipoles placed parallel to each other and at a distance such that the surge impedance (if considered as a transmission line) is 300 ohms, which corresponds to the antenna impedance which is also 300 ohms. The spacing of the parallel elements in order to obtain this 300 ohms impedance depends of course on the diameter of the elements. One of the elements is exactly like the half wave dipole previously discussed, and is broken in the center for connection to the transmission line; but the other element is not broken in the center (a continuous rod approximately half wave long). They are connected together at their outer ends. The principal advantage of the folded dipole is the fact that its impedance is 300 ohms, which matches one popular type of transmission line. Another lesser advantage is the fact that the parallel construction gives a much larger effective element diameter and so will allow it to operate over a wider frequency range with less change of impedance. Of course the same effect can be accomplished with a dipole having the same effective element diameter.

REFLECTORS AND DIRECTORS: The dipole and the folded dipole possess a useful directivity characteristic, having the ability to receive signals best which are on a line perpendicular to the axis of the antenna, and to receive very little signal from points which are on a line with the axis. It is most desirable to improve the directivity of some antennas, and it is very fo tunate that when the directivity is improved in favor of reception from a certain direction, that the antenna gain to signals from this direction goes up and that its response to signals from all other directions goes down. The most common method of accomplishing this result in FM and TV antennas is by the use of directors and reflectors. A reflector is an approximate half wave element placed parallel to and less than a half wavelength from the antenna on the side away from the source of the signal it is desired to reinforce. A director is the same kind of an element except that it is placed on the side of the antenna toward the source of the signal it is desired to reinforce. In an antenna which has three elements, that is the antenna, one reflector and one director, the length of the reflector is usually about 5% longer than the antenna and the length of the director about 4% shorter than the antenna. The exact spacings are best determined experimentally. The action of a reflector is such that there is very little field existing behind the reflector and so very little can be gained by the addition of more reflector elements, but in the case of the director an indefinite number of elements can be added to give increased directivity and gain. In such an array, the length and spacing of the elements is too difficult to calculate mathematically and is determined by experiment.

A Japanese named Yagi did the initial work on arrays consisting of the antenna, a reflector and multiple directors, so today such arrays are commonly called Yagi arrays. The practical limit in the number of elements that can be used for television reception is three directors. More than this gives too narrow a bandwidth for satisfactory reception, but for services other than TV, up to 18 directors have been used.

STACKED ARRAYS: All of the antennas discussed above are of the type which contain all the elements in the same horizontal plane. Where additional gain is required, it is common practice to take two or more of the above arrays and stack them one above the other vertically. The vertical distance between arrays is determined by the method of feeding the transmission line, but in general is about a half wavelength. Stacked arrays not only give added gain, but also add some vertical directivity which in some cases is desirable.

*A Theoretical Discussion of*

# FREQUENCY MODULATION

## *Transmission and Reception*

By means of Frequency Modulation, radio programs are now being broadcast and picked up by transmitters and receivers of new design which practically eliminates all natural static and man-made interference. This new freedom from interference is achieved by the use of (1) a type of modulation which giyes to the signal a characteristic that cannot be duplicated accidentally by nature or the usual sources of electrical interference, (2) by the use of receivers which do not respond to static, man-made interference, or the type of modulation now commonly used for broadcasting, (3) by emphasizing the high frequencies at the transmitter so that at the receiver a de-emphasis circuit can be used to bring the high-frequency notes back down to their correct level while at the same time heavily attenuating tube hiss.

It is the purpose of the following discussion to bring out the points of similarity and of difference between amplitude and frequency modulation and between the receivers and transmitters employed for each system.

### CARRIER MODULATION

The present system of radio broadcasting called "Amplitude Modulated" (abbreviated AM for convenience) employs a carrier of constant frequency whose amplitude is varied at the same rate and in the same degree as the sound pressure that actuates the microphone. Fig. 1 shows the relations between the voltage generated by the microphone by loud and soft notes of high and low pitch. The corresponding signal output from an AM transmitter is shown in Fig. 2. The signal emitted by a "Frequency Modulated" (abbreviated FM) transmitter is shown in Fig. 3. Note that the vertical axis in Fig. 3 shows the INSTANTANEOUS FREQUENCY of the carrier whereas the vertical axis in Fig. 2 shows the instantaneous amplitude of the carrier.

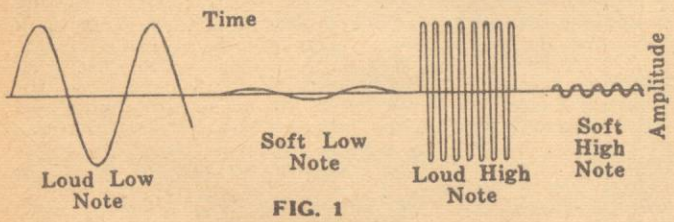


FIG. 1

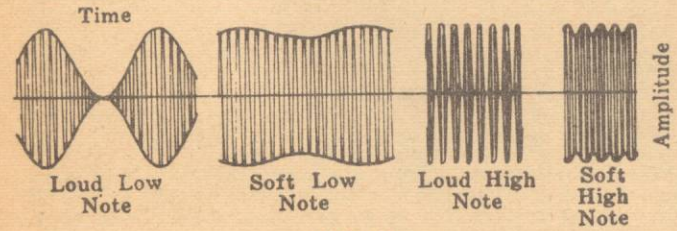


FIG. 2

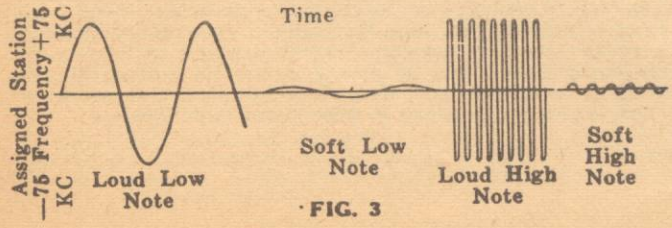


FIG. 3

There is an interesting point of difference between the two types of modulation in regard to the limit of modulation. In the case of amplitude modulation there is a very definite limit to the amount of modulation that can be imposed on the carrier before distortion begins. By definition, complete or 100% modulation is obtained when the envelope of the RF signal touches the zero axis. Under this condition the maximum amplitude of the signal reaches twice the value of the unmodulated carrier.

An AM transmitter cannot modulate without distortion above 100% (on sine waves) because then the signal would be completely absent for a small portion of each audio cycle, as shown in Fig. 4, which would produce an audio signal such as that shown in Fig. 5 in which the distortion in the negative peaks is quite evident.

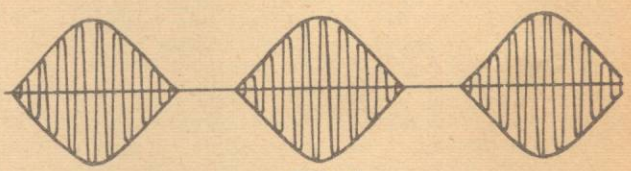

FIG. 4

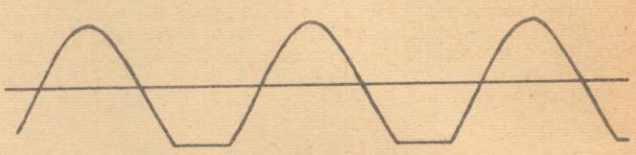

FIG. 5

In the case of Frequency Modulation there is no such inherent limit to the modulation permissible. Complete modulation is that frequency shift agreed upon by the engineers as 100% modulation and all transmitters and receivers have to be designed to operate satisfactorily with this frequency deviation (swing). Most FM transmitters of good design will actually modulate without distortion far above 100%. The limit of modulation is usually to be found in the FM receiver selectivity and limiter action, which will be explained in another section.

### COMPARISON OF TRANSMITTERS

Transmitters for FM differ so radically from AM transmitters that it is difficult to give a step-by-step comparison of the two types. In general, it can be said that FM transmitters employ a greater variety of circuit functions than AM transmitters, but require an almost negligible amount of modulator equipment, regardless of the power of the transmitter, and require smaller power supplies per Kilowatt of power output than do AM transmitters.

In an FM transmitter, the only tubes that are not purposely run Class "C" are the small tubes used for frequency control. All of the remainder are usually run with high bias and high excitation to maintain high plate-circuit efficiency. The high powered circuits can be built with less insulation in FM transmitters than in AM units because the FM transmitter always runs with the same plate voltage and the same RF output voltage. There is no doubling of output voltage at 100% modulation as in the case of the AM signal. For the same reason the output tubes can be operated at higher levels because there will be no surges on them.

The huge and expensive chokes or modulation transformers, characteristic of high-level modulation in the AM transmitter, are conspicuous by their absence in FM transmitters.

There are two principle methods in use for modulating the FM carrier. One is known as "Phase Modulation", the other as "Reactance-Tube Modulation". The final result is the same kind and amount of Frequency Modulation, however.

Phase Modulation has the advantage of having its center-frequency directly controlled by a crystal, but the number of tubes employed in generating the required frequency shift is relatively large, although the tubes themselves are small. In this system, a crystal controlled signal at some relatively low frequency, such as 200 kc, is fed into a phase-shifting network from which is obtained a very small frequency shift, proportional to the modulating voltage. This frequency shift must be multiplied, through a dozen or more doubler and heterodyne stages, before adequate frequency deviation is obtained.

Reactance-Tube Modulation is very simple. It employs a self-excited oscillator, frequency modulated by a reactance tube, in much the same fashion as Wobbulated oscillators are employed in Cathode-Ray I-F scanning signal generators. The essential refinement to obtain satisfactory stability of the center-frequency of the carrier is a frequency-drift corrector, which consists of a crystal-controlled mixer which heterodynes the output signal to a relatively low frequency, say between 1000 and 2000 kc, and passes the resulting I-F into a discriminator which sends back to the reactor tube an AFC voltage to keep the oscillator center-frequency correct. It is obvious that it takes only a few tubes in this system to bring the signal up to the level where power tubes are required.

## AM vs. FM RECEIVERS

Fig. 6 shows the block diagram of a conventional, high-quality AM receiver consisting of an RF stage, first detector or translator (which may have a separate oscillator, as shown in dotted outline, but which usually employs a pentagrid converter), the IF amplifier, which may be one or several stages, the second detector, audio amplifier and power supply.

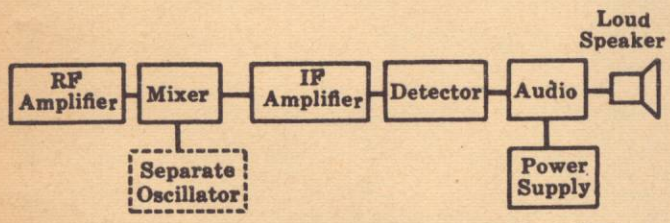


FIG. 6 BLOCK DIAGRAM OF AM RECEIVER

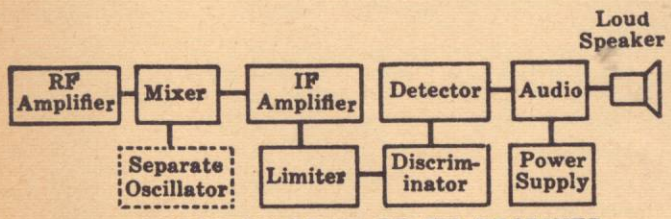


FIG. 7 BLOCK DIAGRAM OF FM RECEIVER

Fig. 7 shows a similar diagram for an FM receiver. Comparing the latter receiver to the former it is obvious that there are many functions common to both receivers. In a step-by-step comparison, the following similarities and differences are noted:

RF STAGE—shown on both receivers. It amplifies the signal at the received frequency before it is heterodyned to intermediate frequency. Its purpose is to furnish a higher level signal to the translator to reduce the importance of the tube hiss contributed by that tube, and to improve the image ratio of the receiver. In many of the lower priced receivers, however, no RF stage is used.

In the AM set for the standard broadcast band the tuning condenser is usually 356 MMF or in some cases 410 MMF or higher. The FM tuning condenser is much smaller because the frequency is so much higher (88 to 108 mc) that the capacity must be reduced in order to obtain enough circuit impedance to obtain a gain from the tube. These condensers usually have 3 to 7 "double spaced" plates giving very low tuning capacities. Values between 15 and 20 MMF are representative for this service.

TRANSLATOR—A translator is required in both AM and FM receivers for the purpose of converting the received frequency to intermediate frequency for further amplification. Either the AM or the FM set, or both, may employ separate oscillator tubes but in most modern designs when cost is a factor, both types of receivers employ pentagrid converter or heptode converter tubes. The only essential difference between the converter in the broadcast AM receiver and the FM receiver is that the capacities and inductance in the FM receiver are much lower than in the conventional Broadcast receiver to accommodate the high signal frequency and the high intermediate frequency.

I-F AMPLIFIER—Both AM and FM receivers employ I-F amplifiers for the purpose of providing the major part of the gain and selectivity of their respective receivers. The selectivity requirements are considerably different in the two cases, however, in the AM receiver the width of the band of frequencies passed by the IF amplifier is quite restricted in order to provide ample discrimination against stations 10 KC or 20 KC away from the assigned frequency of the station it is desired to receive. The FM I-F amplifier must pass a much larger band of frequencies because of the requirement that the carrier swing 75 KC each side of its nominal frequency to give 100% modulation. In order to obtain this wide pass band without complex band-pass circuits that are difficult to adjust, a high intermediate frequency is used. The choice of a high intermediate frequency is also dictated by image requirements. Since the FM broadcasting band extends from 88 to 108 MC, a spread of 20 MC, it is desirable that the intermediate frequency be selected above one-half of 20 MC so that no FM station will be the image of any other FM station. The present choice of intermediate frequency seems well standardized at 10.7 MC but there are some receivers with other intermediate frequencies. These high-frequency intermediate amplifiers differ from the conventional 456-KC I-F amplifier in having much lower gain-per-stage, and therefore having more stages, and in the isolating networks in screen, plate and AVC circuits to prevent interstage coupling. It must be remembered that at the higher frequencies, even straight hookup wires become inductances that cannot be ignored and by-pass condensers have a certain amount of inductance in the condenser itself as well as in the leads. To avoid the parasitic couplings resulting from the inductance of leads and of by pass condensers, the common practice at present in I-F amplifiers on FM receivers is to isolate each screen and each plate return from the common "B" supply by means of resistors, by-passed directly to cathode or to ground as close to the socket as possible. In this way, all I-F currents associated with a given tube are prevented from coupling with currents from any other stage and interstage regeneration is held to a minimum. This point is especially important in FM receivers because regeneration sometimes puts very sharp peaks in the selectivity curve of an amplifier. If the set is operating at such a level that the limiter is unable to smooth out the peak caused by regeneration, the "S" curve of the discriminator will be distorted resulting in corresponding distortion in the audio output from the detector.

LIMITER—The next step in comparing an FM receiver with an AM receiver shows the FM receiver to have a "Limiter" which has no counterpart in the AM receiver.. Up to this point the two receivers are exactly alike in function and actually the FM receiver is no different, except in operating frequency and selectivity, from the AM receiver. In actuality, the FM RECEIVER IS AN AM RECEIVER AS FAR AS THE LIMITER.

All of the circuits can be measured and aligned with a conventional AM generator or, for alignment alone, a Cathode-ray oscillograph and "Wobbulated" (Frequency-Modulated) generator can be very conveniently used, showing the I-F curve shape of the FM receiver in exactly the same manner as for the AM receiver.

As stated at the beginning of this article, one of the three cardinal principles for noise-free reception is to construct the receiver so that it will not respond to the type of signals that Nature can produce. In order to prevent response to static, man-made interference (and all amplitude-modulated signals) a new device is incorporated in the receiver. This device is called a "Limiter."

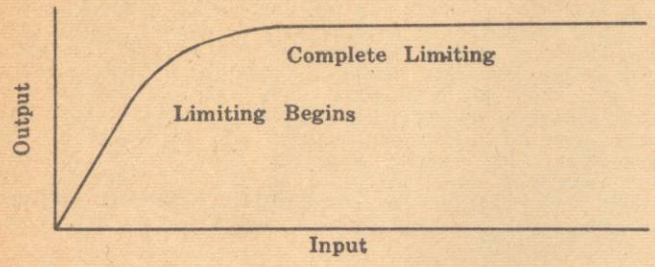


**FIG. 8 LIMITER CHARACTERISTICS**

It will be shown in the explanation of the operation of the discriminator that a signal at the center-frequency of the discriminator produces equal currents in the two diode circuits, which are connected in such a way that the net effect of signal is zero output regardless of the input strength. At this frequency, therefore, amplitude modulation is balanced out by the back-to-back connection of the detector circuits. If, however, the signal impressed on the discriminator is not on the center-frequency, the signal in one diode will be stronger than in the other and consequently any amplitude modulation on the signal will be reproduced. In order to prevent amplitude modulation from reaching the detector, a "Limiter" is installed between the last I-F transformer and the detector. Many of the earlier FM receivers employed a single tube as a "Limiter" but some of the more recent designs employ two tubes in a "Dual Limiter" or "Cascade Limiter" circuit for more perfect elimination of amplitude modulation. It is the function of the "Limiter" to deliver its output signal at a constant level, devoid of amplitude modulation, regardless of the level of the signal input to the device. It is obvious, of course, that there must be a lower level of signal input below which the fixed output voltage cannot be maintained, because if no input signal is supplied to the tube it cannot give output. Therefore the limiter must have an input-output characteristic similar to Fig. 8. Its output increases up to a certain point as the input signal increases to a certain value. Beyond that value of input there is no increase in output. A somewhat, but not exactly, similar condition exists in any radio set in which the volume control is turned up too high. The output SOUNDS LOUDER for increasing amounts of overloading but the actual measured output does not increase materially beyond the point that distortion becomes serious. The louder sound results from the production of an increasing series of distortion products (harmonics), to which the ear is more sensitive. The "Limiter" in an FM receiver works in much the same fashion but has this very distinct advantage: that the distortion products occur at frequencies not reproduced by the system and the discriminator following the limiter is not sensitive to distortion products but to FREQUENCY VARIATIONS. The I-F amplifier can be designed, therefore, without regard to harmonic distortion, because the "Limiter" takes all signals above its "limiting" or threshold value and (amplitude) distorts them unmercifully in producing constant output.

Fig. 9 shows a common circuit arrangement for a single limiter, while Fig. 10 shows the circuit of a Dual Limiter. Limiters, either single or cascade, are operated at low screen and plate voltages so that the tube quickly reaches its maximum output as the signal is increased, and beyond that value, no increase in output signal occurs, regardless of how much more the signal may increase. In normal operation, the signal impressed on the limiter should be great enough to give full output from the limiter, thereby giving maximum suppression of any amplitude modulated signals, or noise pulses, that might be impressed on the limiter. Because of this requirement, FM receivers have sensitivities seldom approached by AM receivers.

DISCRIMINATOR

The next step in comparing the FM with the AM set shows a "discriminator" or frequency detector in the FM receiver without a counterpart in the AM receiver, although AM receivers employing Automatic Frequency control have a similar device used for a slightly different purpose.

It is the purpose of the discriminator to convert the output of the limiter—a constant voltage (within limits) at variable frequency into a variable amplitude proportional to frequency shift so that the detector can be supplied with a signal from which it can extract an audio voltage.

The simplest device for converting frequency variations into amplitude variations is a tuned circuit feeding the detector but purposely mistuned so that the mean carrier frequency is well down on the side of the selectivity curve. A frequency shift in one direction will obviously increase the amplitude while a shift in the opposite direction will decrease the amplitude thereby providing the detector with an amplitude-modulated signal. Such an arrangement, however, is neither efficient nor does it balance out amplitude-modulated signals as does the circuit to be described next.

The most common circuit for converting frequency changes into amplitude changes is shown in Fig. 11. This circuit is familiarly referred to as a discriminator circuit because its original use was in the control circuit of sets employing Automatic Frequency Control, in which case its purpose was to "discriminate" between or recognize those frequencies which were above the mean frequency of its I-F system and those below the mean frequency and to supply to the reactance tube a voltage of the proper polarity to cause the reactance tube to shift the oscillator frequency enough to produce perfect tuning.

The operation of this circuit is of extreme importance in the FM receiver, and since the details of how and why it works are none too widely known. The theory of operation is explained in detail herewith.

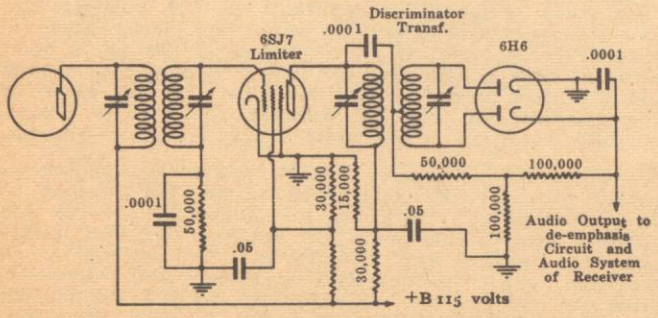


**FIG. 9 SINGLE LIMITER CIRCUIT**

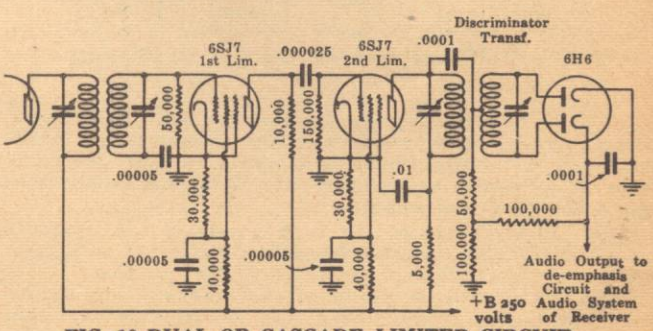


**FIG. 10 DUAL OR CASCADE LIMITER CIRCUIT**

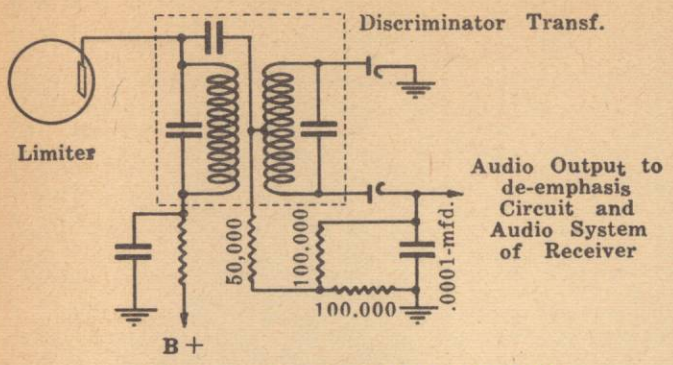


FIG. 11 DISCRIMINATOR CIRCUIT

Fig. 11 shows the most common discriminator circuit. It will be noticed that one cathode is directly grounded while the other is bypassed to ground, which makes it at ground potential as far as I-F is concerned. When I-F voltage is applied between diode plate No. 1 and ground, a current "I" will flow through resistance "R" back to the I-F winding in the same manner as in the conventional diode detector system. The magnitude of the current will be directly proportional to the I-F voltage applied. Voltage applied between diode plate No. 2 and ground will produce a corresponding current "I2" through "R2" proportional to the voltage applied.

Assume, for the moment, that the secondary is far removed from the primary so that no magnetic coupling exists between the primary and the secondary, but that both circuits are tuned to the same frequency: The same voltage will appear between diode plate No. 1 and ground, as between diode plate No. 2 and ground, and as appears across the tuned circuit in the plate circuit of the driver tube. With resistor "R1" equal to "R2", the voltage developed across the two resistors will always be equal but are so connected that the net result of the two voltages in series is zero. If the voltage applied to the driver tube is varied above and below resonance the voltage appearing across the tuned plate circuit and at the diodes, if plotted against frequency, will show the typical resonance curve of a single circuit as shown in Fig. 12.

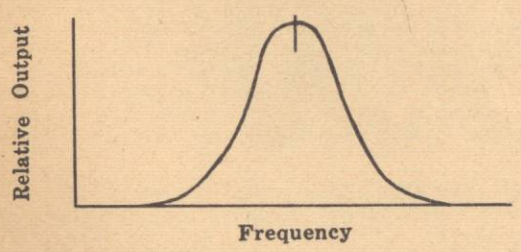


FIG. 12 PRIMARY RESONANCE CURVE

If the secondary is now brought into proximity with the primary, a voltage will be induced into the secondary by flux from the primary current. The following step-by-step explanation of the phase relations, together with reference to the vector diagrams in Fig. 13, shows the operation of the discriminator.

1. The self-induced or "mutually-induced" voltages in two coils magnetically coupled are in exact time phase. This relation is fixed regardless of the condition of the primary circuit, whether exactly in resonance, above or below resonance. Resonance in the primary circuit only serves to change the magnitude of this voltage and the voltage induced in the coupled coil, which two voltages change in exact proportion as long as the degree of coupling remains fixed.

2. At resonance, the impedance around the closed secondary circuit looks like a resistance to the voltage induced in the secondary winding. Consequently, the current that flows is in exact time phase with the induced voltage.

3. The voltage that appears across the secondary inductance is 90 electrical degrees ahead of the secondary current, which is in phase with the induced secondary voltage, which is in phase with the counter induced voltage in the primary which is in **direct phase opposition** to the applied primary voltage. The voltage that appears across the secondary is, therefore, 90 electrical degrees behind the applied primary voltage. Since the secondary is center-tapped, the phase of the voltage at one end of the secondary is 90 electrical degrees behind the applied primary voltage, while the other end of the secondary is in phase opposition or 90 electrical degrees ahead of the applied primary voltage.

4. Since the applied primary voltage also appears between the center-tap of the secondary and ground, it is obvious that the total effective voltage between diode No. 1 and cathode is equal to the voltage across half of the secondary in series with the voltage across the primary. Similarly, the voltage between No. 2 diode and cathode is the voltage across the No. 2 half of the secondary in series with the voltage across the primary. Since it has been shown above that there is a 90 degree phase difference between the primary voltage and the voltage across each half of the secondary, these voltages cannot be added arithmetically, but must be added geometrically. Fig. 13 shows the vector representation of this addition.

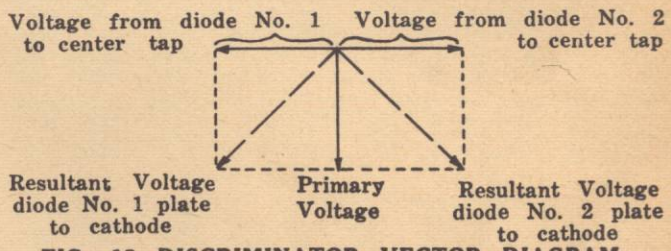


FIG. 13 DISCRIMINATOR VECTOR DIAGRAM AT RESONANCE

## PHASE RELATIONS WITH SECONDARY RESONANCE

If the frequency imposed on the tuned primary is slightly higher than the resonant frequency of the secondary, the current through the secondary will no longer maintain its 90 degree relation to the primary voltage but will begin to lag behind the primary voltage. The vector diagram then appears as in Fig. 14, wherein the perpendicularity between Ep and the two secondary voltages has been disturbed.

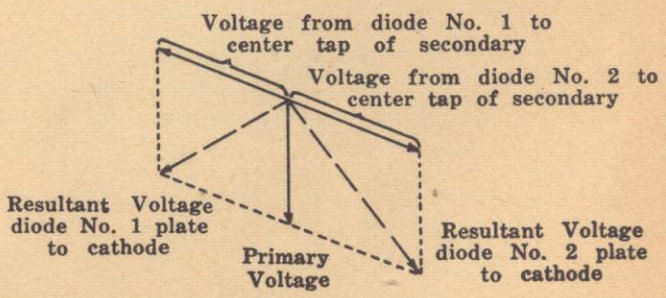


FIG. 14 DISCRIMINATOR VECTOR DIAGRAM SLIGHTLY ABOVE RESONANCE

It is now obvious that the voltage applied between one diode and ground is greater than that applied between the other and ground. Therefore, the voltages appearing across R1 and R2 (in Fig. 11) are unequal and there is a net remaining voltage available for output. As the frequency of the applied voltage departs even more from the resonant frequency of the secondary, the angle between the primary voltage and the secondary voltage increases, tending to increase the difference

between the voltages appearing across the two diode load resistances, but at the same time the vectors are all becoming smaller because of departure from resonance. The net result is a curve of output voltage vs. frequency deviation approximately like the curve in Fig. 15 in which there are three major slopes and two prominent points of inflection "A" and "B".

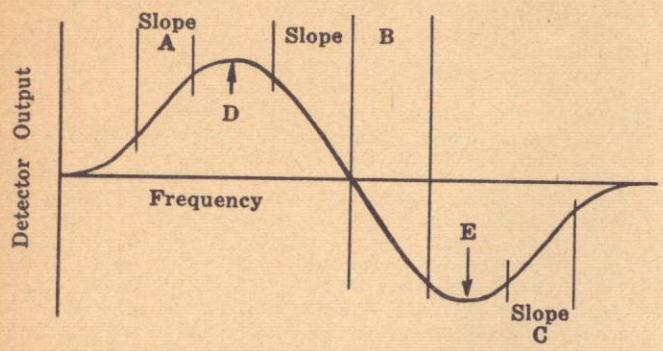


**FIG. 15 DISCRIMINATOR CHARACTERISTIC**

Usually the center slope is by far longer and straighter than either of the other slopes. Detection from this slope therefore has less distortion for any specified frequency excursion because of superior linearity, and will handle a larger frequency excursion than either of the other two slopes. The condition for correct detection is with the carrier centered where the "S" curve crosses the zero axis and with the frequency excursion restricted to the straight portion of the characteristic. Fig. 16 shows a point-by-point conversion of

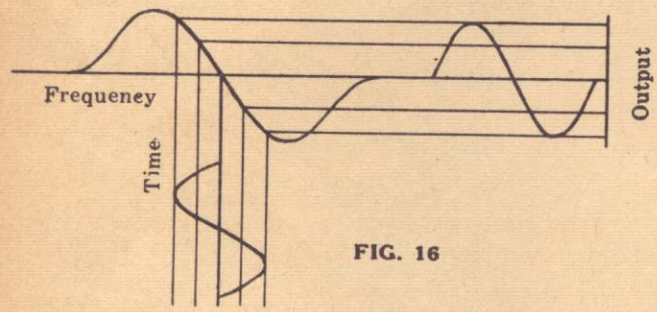


**FIG. 16**

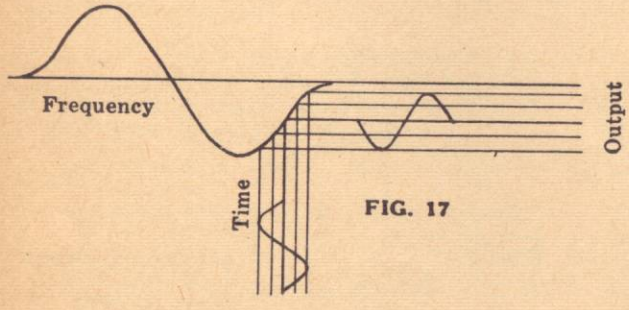


**FIG. 17**

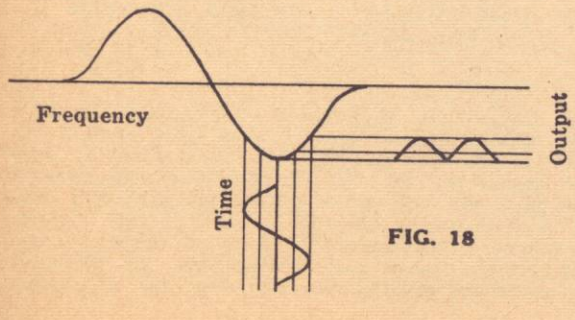


**FIG. 18**

frequency modulation into audio output, using the normal (center) slope of the "S" curve. Fig. 17 shows a point-by-point conversion of frequency modulation into audio output using the "back slope" of the "S" curve for detection. Fig. 18 shows the worst possible condition of distortion because of mistuning an FM receiver. In this case the mean carrier frequency has purposely been placed at the point of inflection of the "S" curve. A point-by-point deviation of the audio output wave from a pure sine wave of frequency modulation discloses at first the rather surprising result that the fundamental frequency has been lost and only second and higher order harmonies come out of the device! The "S" curve of the discriminator produces the phenomenon that many FM receivers tune in each station at three closely spaced points on the dial, separated by two points of high distortion. The amount of distortion at the two mid-points depends upon the sharpness of the upper and lower bend in the "S" curve and on the amount of frequency swing being used.

So far the discussion of detecting frequency modulated waves has been confined to the characteristic "S" curve of the discriminator alone. In actual receivers, detection takes place by virtue of the effective "S" curve of the discriminator plus the sharpening effects of the I-F selectivity curve, counteracted by the broadening effects of the "Limiter." The actual peak-to-peak separation of the points of inflection of a typical discriminator may be as much as 350 to 400 KC but the net peak-to-peak separation in a complete receiver may be only 150 to 200 KC. In some cases, where the I-F amplifier is too sharp, the effective peak-to-peak separation may be 150 KC or under. If the separation is only 150 KC, peak-to-peak, amplitude distortion will be evident on the recovered audio voltage whenever the modulation percentage approaches 100%. If the peak-to-peak spacing is less than 150 KC, serious amplitude distortion will be evident with lower percentages of modulation.

In construction, the discriminator transformer is usually quite like the other I-F transformers in the set, the only apparent difference being the presence of a coupling condenser from the center-tap of the secondary to the high side of the primary. In some instances, however, the discriminator transformer is made with special tuning components such as air dielectric trimmer condensers, or it may be permeability tuned. In general, it appears to be better engineering practice to make the discriminator physically similar to the other I-F transformers so that if there is any tendency for the transformers to drift, better alignment is maintained if all transformers drift in the same direction in approximately the same amount, rather than to have the discriminator unusually stable and to allow the I-F transformers to drift with respect to it. This latter arrangement aggravates the mistuning of the I-F and discriminator circuit more than the method of constructing all units physically similar.

AUDIO SYSTEM: The audio systems employed on AM and FM receivers are certainly not essentially different in theory but in actual practice considerably more care must be given to the design of the audio amplifier for FM than for AM because of the wide range of frequencies for which the FM audio amplifier should be designed and because the wider pass band makes distortion more irritating to the listener. In the better grades of FM receivers, two speakers are used, one designed for efficient reproduction of the low-and medium-frequency bands while the other is designed for the high-frequency band. In sets of more moderate price a compromise design single speaker is used. Such a speaker can admittedly be better than the present normal grade of single speakers for broadcast sets, but certainly cannot give the wide range of tone and brilliance of which a properly designed dual-speaker system is capable. On AM receivers of the usual design, wherein no attempt has been made to provide High-Fidelity reproduction from local programs alone, the selectivity is such that there are very few frequencies in the "tweeter" range transmitted to the amplifier. Consequently, there is much less reason to use a "Woofer-Tweeter" combination on an AM set than on an FM receiver.

### PRE-EMPHASIS—DE-EMPHASIS

It has already been mentioned that one of the major devices for reducing noise in the present system of FM broadcasting and receiving is "pre-emphasis" of high audio frequencies at the transmitter and "de-emphasis" at the receiver.

"Pre-emphasis" consists in passing the audio signal from the microphone through an amplifier that is not flat in its frequency characteristic, but whose gain increases with frequency according to a definite mathematical law. The gain curve of the pre-emphasis amplifier is shown in Fig. 19.

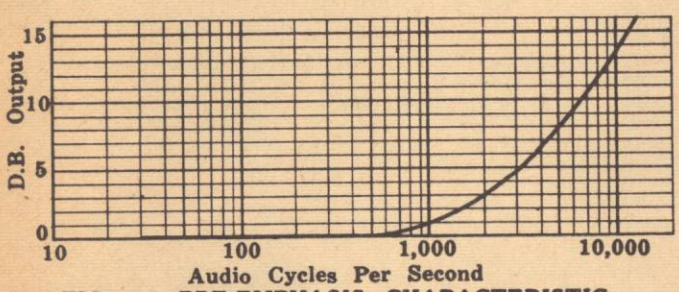


**FIG. 19 PRE-EMPHASIS CHARACTERISTIC**

"De-emphasis" consists in passing the signal through a net-work in the receiver which attenuates the high frequencies in an amount to compensate for the "Pre-emphasis" at the transmitter. At first thought it might seem more logical to make both systems flat in their gain characteristics but the real purpose of "Pre-emphasis" is to permit the use of "de-emphasis" in the receiver, which takes out most of the "hiss" that gets past the limiter.

One needs only to consider how the use of a conventional "Tone Control", suppressing high frequencies on an AM set tuned to a weak signal, reduces the irritation caused by tube hiss, to realize what an improvement is made in the faithful and pleasing rendition of music when the beneficial effect of eliminating tube hiss is accomplshed without losing the high-frequency portion of the signal as well! The "de-emphasis" circuit, therefore, is incorporated in all correctly designed FM receivers to take out hiss, and "pre-emphasis" of high frequencies is applied at the transmitter to accentuate the highs as much as the "de-emphasis" circuit will later attenuate them. High boost, high suppression, bass boost, etc., may all be applied as desired after the "de-emphasis" circuit, in exactly the same manner as done in AM receivers, to give whatever degree of control of tone is desired.

A consideration of the amount of "pre-emphasis" employed might lead to the assumption that the transmitter would be liable to over-modulate on high audio frequencies, which it certainly would if a fidelity curve was to be made with a constant voltage input giving 30% modulation at 400 cycles, but the frequencies which are amplified must have the lowest amplitude in speech and music and therefore the transmitter does not over-modulate on high frequencies on a normal program.

### AUTOMATIC VOLUME CONTROL

In AM receivers, careful attention has been given to the operating characteristics of all tubes and circuits to assure an absolute minimum of amplitude distortion. Tubes with variable-Mu characteristics are used to maintain reasonably constant output voltage with wide variations in input signal level. These tubes have been carefully designed with reference to their transconductance vs. grid bias so that this curve is very smooth and gradual, so that as little distortion as possible results when progressively larger signals operate the tubes at progressively higher negative bias with correspondingly lower gain.

In FM receivers, the above precautions are unnecessary since amplitude distortion is of no importance because the limiter operates to remove all amplitude modulation, including all amplitude distortion, before the signal is delivered to the discriminator to be detected. Accordingly, it is not necessary to carefully avoid those conditions which contribute to distortion in the AVC circuit of AM receivers. For the purpose of keeping the signal level at the limiter (or ratio detector if used) relatively constant however, AVC is sometimes used in the higher quality FM circuits. By so doing, the limiter (or ratio detector) is not required to function over such a wide range of signal levels and can be designed for better efficiency in noise reduction.

### ANTENNAS

The transmission characteristics of the atmosphere to waves above 40 megacycles is such that the present FM signal can be relied upon to cover only slightly more than the optical (direct line-of-sight) distance between transmitter and receiver. Just beyond this area there is a region in which rather consistent reception is enjoyed but the signal strength falls rather rapidly as the distance beyond the line of sight is increased. There are many instances on record of signals being received over much greater distances but such reception is subject to heavy fading or may occur only once in a very great time.

In an attempt to cover as much territory as possible FM transmitting antennas are generally placed as high as possible, either on top of a very tall building or tower or on top of a high hill or even the crest of a mountain. The antennas used are usually some variation of the "Turnstyle Antenna," designed to concentrate the radiation at an angle close to the earth rather than permitting a large part of the radiated energy to go out into space, since high-angle radiation is not reflected down to earth as efficiently as are waves of somewhat lower frequency.

In an effort to obtain the best possible FM signal, the receiving antenna should be as high as possible also, and well away from steel buildings or other metallic structures. The best simple receiving antenna is a doublet consisting of two horizontal rods or wires with each rod or wire cut to the optimum length according to the frequency of the signal it is desired to reinforce most. The length is calculated from the following simple formula

$$L \text{ (in inches)} = \frac{2770}{\text{Megacycles}}$$

If all of the stations serving a given area are producing adequate signal strength the doublet may well be cut for 98 MC, which is the center of the band. The length of each rod in that case is 28 inches. In Fig. 20 a doublet is shown constructed of bars, which is much more convenient to mount where a second support is difficult to find.

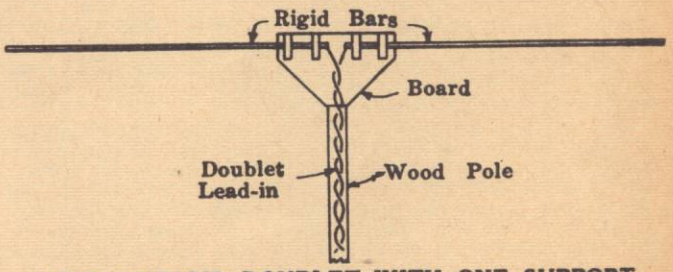


**FIG. 20 RIGID DOUBLET WITH ONE SUPPORT**

In special instances, reflectors may be added to a doublet to increase the signal or to minimize interference coming from a given direction. In other cases, a multiple antenna array may be used to boost the input signal and to increase the directivity of the antenna, but all of these latter arrangements are special cases where there is enough reason for improved reception to warrant the experimental work necessary to obtain proper operation from such special antennas.

In areas of high signal level it is probable that an ordinary piece of wire a few feet long will serve adequately as a receiving antenna.

# THE RATIO DETECTOR

## GENERAL

The popularity of FM reception, and hence the demand for a more economical receiver, led to the development of the ratio detector. This type of detector eliminates the limiter stages and high gain IF systems which are necessary with discriminators.

The mode of operation of the ratio detector is such that it does not readily respond to changes in the amplitude of a signal but is sensitive to frequency variations. Consequently, an FM receiver can be designed to have the performance charteristics of a standard discriminator-limiter FM receiver, but with fewer stages. The saving in tubes, components and labor results in an economical receiver of remarkable efficiency.

When an unmodulated signal is being received, both diodes receive equal voltages. The current is the same in each load resistor and the voltages E1 and E2 are equal. The ratio of E1/E2 is 1/1 and no voltage exists between point 'A' and ground. The value of voltage E3 is proportional to the strength of the carrier.

When an amplitude modulated signal is impressed upon the detector, the voltages applied to the diodes vary with the modulation, but each diode receives equal voltages. Due to the long time constant of the load resistors and the electrolytic capacitor, no change occurs in the value of voltage E3, and there is no audio output from the detector.

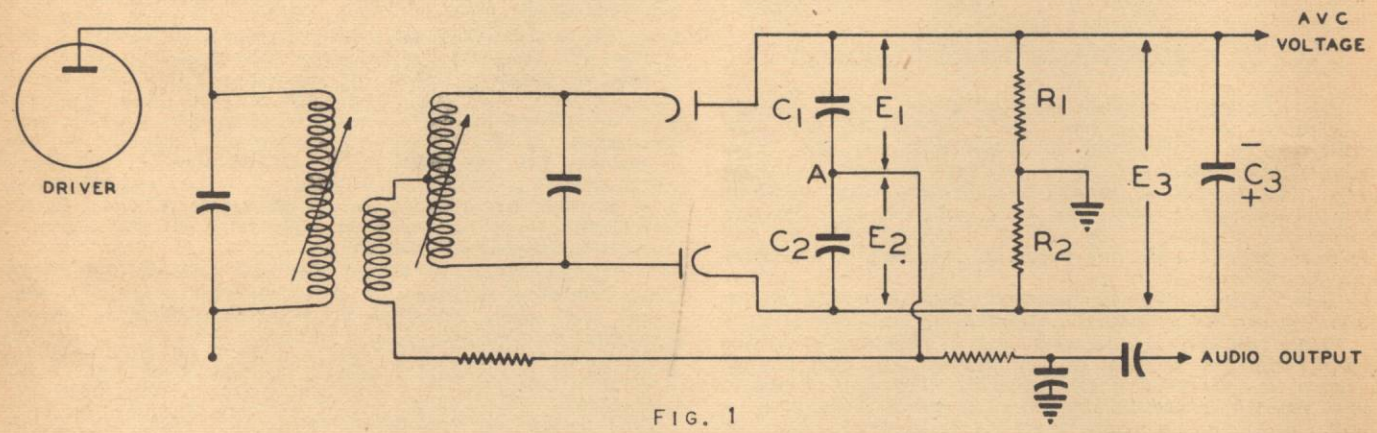


FIG. 1

## OPERATION

The ratio detector is similar to a discriminator in that the input circuits are comparable. Here the similarity ends as the diodes are connected differently and the addition of an electrolytic capacitor makes for a marked difference in component values.

The ratio detector circuit shown in Figure 1 is the type used in the Meissner FM Receptor. The primary and secondary circuits are tuned to the IF frequency, 10.7 mc, and the tertiary winding is coupled to the primary. The secondary is a balanced center-tapped winding designed to have high Q. A twin diode tube, such as the 6AL5, is commonly used as the detector tube. The driver stage shown is the last IF amplifier, and is designed to have high gain.

The action of the ratio detector will be summarized briefly. With an unmodulated signal, the voltages appearing at each diode are equal, and opposite in polarity. The diodes rectify, and a current flows through R1 and R2 in series. A DC voltage E3 appears across the load resistors and charges the electrolytic capacitor C3. This voltage is balanced to ground by the load resistors R1 and R2 and acts as a bias on the diodes. This bias voltage is proportional to the carrier and 'fixes' the conducting level of the diodes.

The values of R1 and R2 and C3 are so chosen as to have a time constant of approximately one quarter second. Due to this long time constant, the circuit cannot readily respond to bursts of noise which amplitude modulate the carrier. The circuit will, however, follow a fading of the carrier and hence affords an excellent source of AVC voltage.

The values of C1 and C2 are equal, and their capacities are so chosen that their series reactance will afford an effective by-pass to the 10.7 mc IF frequency, and not affect the useful audio frequencies. The voltages E1 and E2 which appear across these capacitors are proportional to the currents which flow through resistors R1 and R2, and their sum is always equal to E3 or the voltage across the electrolytic capacitor. The junction of these capacitors is used as the point of audio recovery.

When a frequency modulated signal is being received, the action of the tertiary winding is such that a voltage in quadrature is impressed upon the secondary, and the diodes no longer receive equal voltages. The currents in R1 and R2 are no longer equal, one becoming greater and the other lesser, but these currents are such that the voltage across the load resistors E3 has not changed. Since the currents in R1 and R2 are no longer equal, the voltages across C1 and C2 are no longer equal. Since the ratio of the voltages E1/E2 is no longer 1/1, a voltage exists at point 'A' which is proportional to the excursion or deviation from the mean. This voltage at point 'A' is the output voltage of the detector and is passed through a suitable de-emphasis filter and into the audio system of the receiver.

A characteristic curve of output voltage vs. frequency looks approximately like the curve shown in Fig. 15, Page 26.

Note that there are three slopes, the center one of which is longer and straighter than either of the two back slopes. Detection from the center slope has less distortion because it is more linear and will handle more frequency deviation than the other two. The condition for correct detection is with the carrier centered where the 'S' curve crosses the zero axis.

Fig. 16, Page 26 shows a point-by-point conversion of frequency modulation into audio output, using the correct (center) slope of the characteristic.

Fig. 17, Page 26 shows the use of one of the back slopes with the distortion resulting from such mistuning when large frequency deviations exceed the linear portion.

Fig. 18, Page 26 shows the worst possible tuning condition with the carrier at the curvature between the normal slope and a back slope. This produces the surprising result that the fundamental frequency is lost and the second harmonic predominates.

Because of the three slopes, a receiver with a ratio detector will have three points of reception close together on the dial with the two points of extreme distortion between, as described above. The center point of reception is, of course, the correct one.

# TELEVISION TEST PATTERNS AND RECEIVER ADJUSTMENT

This Chapter is taken from the Howard W. Sams PHOTOFACT Television Course and is reproduced with the permission of the copyright owners, Howard W. Sams & Co., Inc., Indianapolis 1, Ind. It is one of 18 chapters in the PHOTOFACT Television course. The other 17 chapters complete a full discussion of television circuits and principles of operation. Photographs of transmitted test patterns showing the effect of receiver misadjustments courtesy of the National Broadcasting Company and the R.C.A. Service Company, Inc.

For a period of from fifteen to thirty minutes preceding each television broadcast, the station transmits a test pattern or chart which usually carries the station's call letters or a distinguishing insignia. This same test pattern is frequently broadcast for longer periods of time when no regular television program is scheduled. The purpose of the test pattern is to provide the television service technician with a useful "tool" to assure proper adjustment of the various receiver controls which effect a correct presentation of the television picture. Another purpose of the test pattern is to give the user an opportunity to adjust the front panel controls for the best picture before the regular program starts. Such controls as horizontal and vertical hold, horizontal and vertical centering; linearity in both directions, and sharp focus can all be precisely adjusted by the use of the test pattern. In this section we will present a review of the use of those controls and show their effect upon the appearance of a transmitted pattern.

Figure 1 shows the appearance of a typical transmitted test pattern as received on a correctly-adjusted modern-television receiver. The various characteristics of the pattern are similar in application to those of a more complex test chart which has been developed as a standard by the television transmitter committee of the Radio Manufacturers Association engineering department. This R.M.A. standard resolution chart is used in testing the performance of both television transmitters and receivers and a study of its features will serve to explain the use of less complicated television broadcast station test patterns such as Figure 1.

Figure 2 is a reproduction of the R.M.A. television resolution chart, with the addition of explanatory letter symbols for some of its salient features. The chart will be seen to consist of a series of geometric forms and a number of tones ranging from black through a series of gray steps to white. The gray scales are of value in determining whether all elements of the television system are preserving the correct ratios of light intensities (as video modulation) to accurately reproduce the televised scene at the receiver picture tube.

Fig. 1 Normal Transmitted Test Pattern

The "fan shaped" wedges in both horizontal and vertical directions are composed of lines whose width gradually decreases as the lines approach the center. By observing the point at which the lines are no longer distinguished from one another, an estimate of the "resolving power" of the television system including the receiver under test, can be determined. The standard test chart shows by numbers placed beside the horizontal and vertical wedges, the corresponding numbers of lines which are being reproduced when the individual lines of the fan are just distinguishable from one another. It should be noted that the vertical fans of the test picture are used to determine the performance of the horizontal system of the receiver and conversely the horizontal fans of the test pattern are used to determine vertical receiver performance.

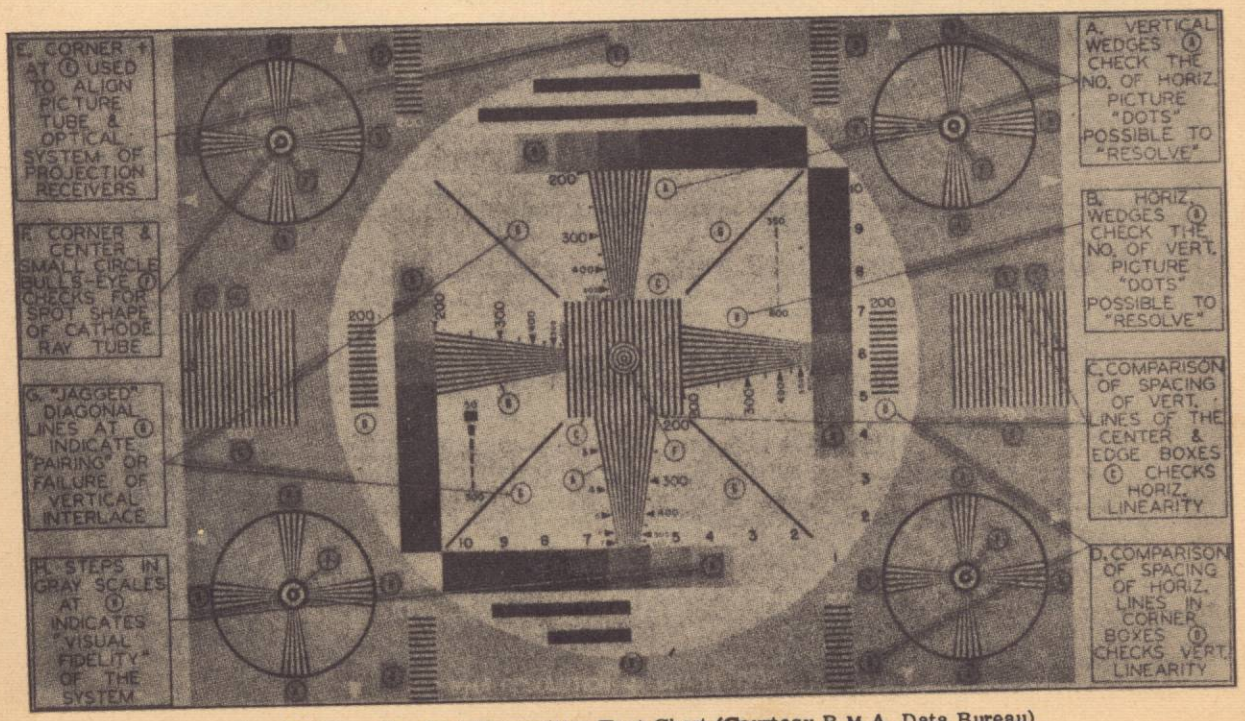


Fig. 2 R.M.A. Standard Transmitter Test Chart (Courtesy R.M.A. Data Bureau)

Tests for vertical and horizontal linearity, as well as other requirements, such as interlace, are also provided by this chart and are described in the captions accompanying the chart. Their application in the simplified type of pattern represented by the station transmission of Figure 1 will be discussed in greater detail, as we consider the effect on the reproduced pattern caused by maladjustment of controls or malfunctioning of the various circuits.

CONTROLS - THEIR USES AND ADJUSTMENT: Controls can be generally classified in two distinct groups:

1. "Operating" or Front Panel Controls. These controls which are located on the front panel of the receiver are operated by the user. They normally include the sound level volume control with an associated switch to turn the receiver on and off, a station selector to allow the set to be tuned to the desired television broadcasting station and a group of controls to adjust the appearance of the picture. The picture control group permits the user to adjust the brilliance, contrast, clarity and stability of the image.

2. "Non-Operating" or Pre-Set Service Controls. The circuit controls which require adjustment only during original installation or at infrequent intervals are located in such a position that they are not readily accessible to the user. Most television manufacturers, realizing that the proper adjustment of these "service type" controls determines the satisfactory operating of the receiver, insist that these controls be accessible only to well qualified, authorized television service technicians. The number and complexity of these pre-set or semi-fixed adjustments differ greatly between the designs of individual manufacturers.

The Radio Manufacturers Association through its engineering standards group is attempting to standardize the names of controls and their functions. Due, however, to the accelerated pace of receiver production in its initial stage and the enthusiasm of sales and advertising departments, controls have been called by a variety of names.

An analysis of the receivers of leading manufacturers, including electrostatic deflection, electromagnetic deflection and projection types, reveals the fact that as yet, no design pattern has evolved to determine which controls should be placed on the front panel or relegated to a position within the receiver.

PLACEMENT OF ADJUSTABLE CONTROLS: A representative group of television receivers which from our analysis covers all of the design variations, has been studied to determine the placement of controls. The results of this study are presented in the form of two charts shown as Figures 3 and 4.

In these charts, the control function is first described by the name which has been suggested for radio industry standardization and the other names following it are those which are still in use in the service literature of many companies.

In the chart of Figure 3, the operating or front panel controls are classified in order of frequency of use in modern receiver design. It will be seen that all television sets employ at least three of the front panel controls in common with one another. These are: station selector, volume, and contrast. In addition to these three basic operating controls, others are employed in the frequency shown in the chart. The number of front panel controls varies from a minimum of three to a maximum of eight. Five percent of the receivers had three front panel controls, ten percent had five, forty percent used six, another forty percent employed seven and the remaining five percent had eight controls.

The functions of the station selector, volume, and contrast controls are properly a part of the study of RF and Video amplifiers. The other controls listed in the chart of Figure 3 will be discussed in common with the "non-operating" or pre-set controls analyses in chart shown as Figure 4.

The controls to be adjusted by the service technician and listed in Figure 4 are much more varied in number and diversity than the front panel group. In the receivers analyzed, the range of usage of these types varied from a minimum of five in a table model to a maximum of fifteen in a large projection receiver.

The pre-set controls are mounted on any surface or plane of the chassis as determined by the particular mechanical design. In general, the controls which will most likely require occasional readjustment are located in such a position that they will be accessible without removing the chassis from the cabinet. In some designs certain of these controls are made available by knob or screw driver slot through the back panel and do not require back panel removal.

The controls of a television receiver may be classified into four main groups:

1. Those which adjust the operating conditions of the cathode-ray picture tube.

a. Adjustment of ion trap position and current to return the beam to screen.

b. Adjustment of the deflection yoke to position scanning raster correctly.

c. Focus to obtain sharp definition.

d. Adjustment of C-R tube operating voltages to establish proper "black level" and highlight brightness.

e. Control of scene brightness.

| Order of Use | Name of Control | Function of the Control | % of Sets Use |
|---|---|---|---|
| 1 | Station Selector, Channel Selector, T. V. Tuning | To select the desired T. V. Station. | 100 |
| 2 | Volume, Volume Control, Sound Volume | To adjust the sound volume. | 100 |
| 3 | Brightness, Brilliance, Background | To adjust average light intensity. | 95 |
| 4 | Contrast, Picture, Picture Control | To adjust video signal amplitude. | 100 |
| 5 | Fine Tuning, Sharp Tuning, Vernier | To tune accurately to sound channel. | 85 |
| 6 | Focus, Focusing Control | To adjust C. R. tube spot definition. | 55 |
| 7 | Horizontal Hold, Horizontal Speed, Framing | To adjust free running period of the horizontal oscillator. | 40 |
| 8 | Tone, Tone Control | To vary audio frequency response. | 35 |
| 9 | Vertical Hold, Vertical Speed | To adjust free running period of the vertical oscillator. | 30 |
| 10 | High-Low Bandswitch | To select input system for high or low channel group. | 5 |

Fig. 3 "Operating" or "Front Panel" Controls

| Order of Use | Name of Control | Function of the Control | % of Sets Use |
|---|---|---|---|
| 1 | Width, Horizontal Size, Horizontal Amplitude, Picture Width Control | To adjust the picture size in the horizontal direction. | 100 |
| 2 | Height, Vertical Size, Vertical Amplitude, Picture Height Control | To adjust the picture size in the vertical direction. | 100 |
| 3 | Vertical Linearity No. 1 | To adjust the scanning wave shape in the vertical plane. | 80 |
| 4 | Horizontal Linearity No. 1 | To adjust the scanning wave shape in the horizontal plane. | 75 |
| 5 | Vertical Hold, Vertical Speed | To adjust free running period of the vertical oscillator. | 70 |
| 6 | Horizontal Centering, Horizontal Position Control | To adjust the picture position in the horizontal direction. | 70 |
| 7 | Vertical Centering, Vertical Position Control | To adjust the picture position in the vertical direction. | 70 |
| 8 | Horizontal Hold, Horizontal Speed, Framing | To adjust free running period of the horizontal oscillator. | 60 |
| 9 | Focus, Focusing Control | To adjust C. R. tube spot definition. | 45 |
| 10 | Horizontal Oscillator Frequency Adjustment, Horizontal Lock | To adjust frequency of sine-wave oscillator (A. F.C. control). | 45 |
| 11 | Horizontal Drive, Horizontal Peaking | To adjust amplitude of peak portion of horiz. scanning wave | 30 |
| 12 | Horizontal and Vertical Centering by Adjustment of Focus Coil Position | To center scanning raster in both planes. | 30 |
| 13 | Focus Coil Adjustment | To adjust spot size by focus coil position. | 30 |
| 14 | Horizontal Linearity No. 2 | Same as item 4 (secondary adjustment). | 25 |
| 15 | Horizontal Oscillator Phase Adjustment | To adjust phase of horiz. oscillator to pulse rate (A.F.C. disc.) | 20 |
| 16 | Picture Cut-Off or C. R. T. Bias Adjustment | To adjust "black" level of picture tube (grid 2 voltage). | 10 |
| 17 | Horizontal Linearity No. 3 | Same as items 4 and 14 (tertiary adjustment). | 5 |
| 18 | Vertical Linearity No. 2 | Same as item 3 (secondary adjustment). | 5 |
| 19 | Ion Trap Adjustment, Beam Bender | To adjust current through the ion trap magnet coils. | 5 |
| 20 | Service Control, Screen Voltage Horizontal Output Tube | To adjust output of horizontal amplifier (aux. width control). | 5 |
| 21 | Coarse Focus | To set range of main focus control. | 5 |
| 22 | Phase Detector Balance | To adjust balance of A. C. F. discriminator. | 5 |
| 23 | Excitation, Anode Voltage Control of Projection Tube | To adjust operating point projection picture tube. | 5 |
| 24 | Brightness, Brilliance, Background | To adjust average light intensity. | 5 |

Fig. 4 "Non-Operating" or Pre-Set Controls (Not on Front Panel)

Fig. 5 Focus Coil and Ion Trap Misaligned

2. Those which establish the correct "lock in" or hold of the horizontal and vertical scanning oscillators.

a. Horizontal hold which sets the free running frequency of the horizontal scanning oscillator.

b. Vertical hold which sets the free running frequency of the vertical scanning scanning oscillator.

c. Horizontal sine wave oscillator frequency adjustment, in A.F.C. systems.

d. Horizontal discriminator phase control to establish discriminator balance.

3. Those which adjust the dimensions and position of the picture.

a. Width control adjusts horizontal size.

b. Height control adjust vertical size.

c. Horizontal centering which moves the entire picture in the horizontal plane.

d. Vertical centering which moves the entire picture in the vertical plane.

4. Those which determine the shape of the scanning voltage waves to produce an undistorted picture.

a. Horizontal linearity controls the shape of the horizontal scanning wave.

b. Horizontal drive determines the ratio of pulse to linear sawtooth for the voltage wave in magnetic deflection.

c. Vertical linearity controls the shape of the voltage wave from the vertical scanning oscillator.

The effect of misadjustment of these controls will be shown in the order outlined.

FOCUS COIL AND ION TRAP ADJUSTMENT: Figure 5 shows the received test pattern when the focus coil and the ion trap are not in correct position on the neck of the picture tube. The ion trap rear magent poles should be positioned so that they are approximately over the little "flags" which are attached to the ion trap cylinder.

The picture tube must be mounted in such a position that these ion trap flags are in a horizontal plane when looking down upon the tube. When this has been done, and the tube

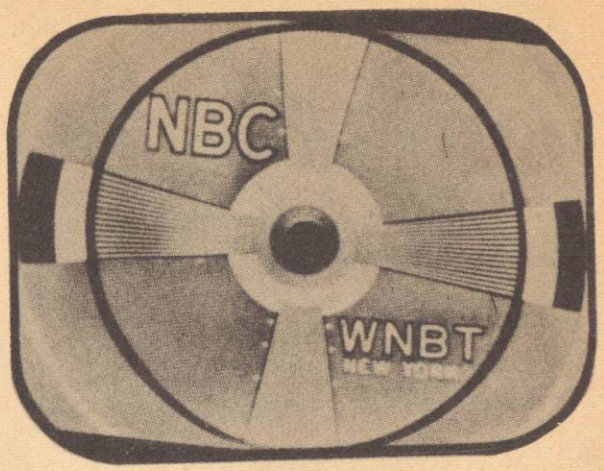


Fig. 6 Deflection Yoke Not Properly Adjusted. (Rotated)

secured in position, the ion trap can be moved slightly back and forth along the tube neck and at the same time rotated slightly around the tube, until the brightest raster is obtained on the screen. The trap adjustment screws should then be tightened sufficiently to hold the trap in position but still allow further adjustment.

The focus control setting, the focus coil position, and the ion trap magent position are interdependent, and in the original installation procedure an adjustment of one may require readjustment of the others. The shadowed corner, as well as the poor vertical positioning shown in Figure 5, indicates that the electron beam is striking the neck of the tube. To correct this condition the focus coil should be adjusted in its mounting until the picture is properly centered.

If no raster can be obtained on the picture tube screen it is an indication of improper mounting of the ion trap magnet assembly. An inverted mounting from top to bottom or from front to back can cause such a condition.

DEFLECTION YOKE ADJUSTMENT: Figure 6 shows the effect on the test pattern of improper mounting of the deflection yoke assembly.

If the lines of the raster are not horizontal and squared with the edge of the picture mask, it is an indication that the deflection yoke, made up of both the horizontal and the vertical deflection coils, is not correctly positioned. To correct this condition the adjustment screws which hold the yoke should be loosened, and the coil assembly rotated about the axis of the tube until the raster is properly lined up with respect to the edges of the picture mask. The yoke adjustment screws or wing nuts should then be securely tightened.

The position of the deflection yoke along the picture tube neck will affect the deflection sensitivity (amount of scanning voltage for a given deflection).

FOCUS CONTROL AND FOCUSING ADJUSTMENTS: Figure 7 illustrates the appearance of the received test pattern when the electron beam is "out of focus". The image is not sharply defined as in the normal picture of Figure 1.

Fig. 7 Focus Control Misadjusted

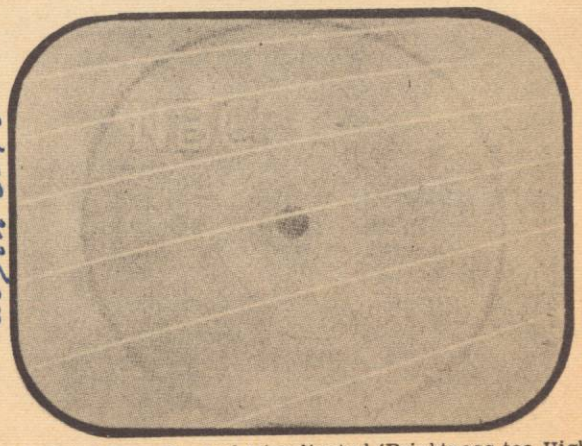

Fig. 8 Brightness Control Misadjusted (Brightness too High)

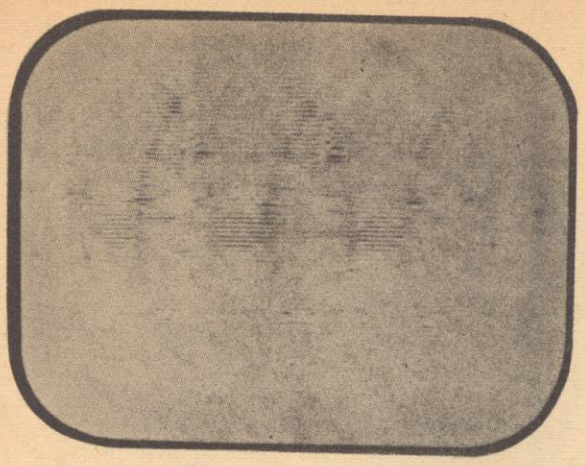

Fig. 9 Horizontal Hold Control Misadjusted

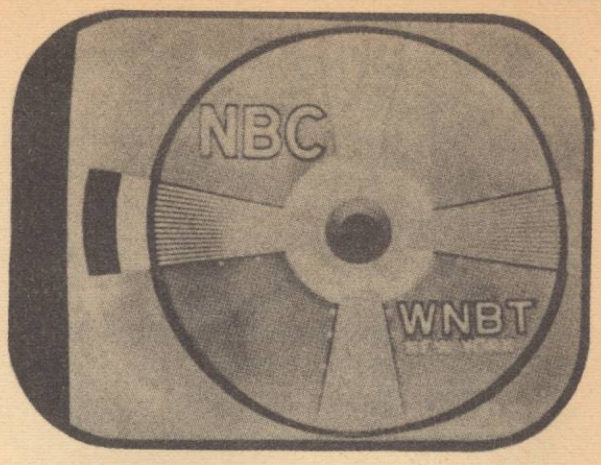


Fig. 10 Horizontal Hold Control Misadjusted

Electrostatically focused picture tubes require only one adjustment for focusing, while electromagnetically focused picture tubes require two separate service adjustments. The first is the mechanical positioning of the focus coil as covered under "Focus Coil and Ion Trap Adjustments", and the second is the variation of the current through the focus coil by means of a variable resistor.

The best focus adjustment is made by sliding the focus coil back and forth along the neck of the picture tube while adjusting the focus control and watching the test pattern for the sharpest picture. In some designs two variable controls (coarse and vernier) are used.

BRIGHTNESS CONTROL: As indicated in the chart of Figure 3, the brightness control is usually made one of the front panel group and is a "user" operated control. It is employed in conjunction with the contrast control to obtain the best possible picture quality. It is possible to cut off the beam with this control, in which case no picture is seen and the tube remains dark. Conversely, too high a setting of the contrast control will result in a light "washed out" picture as shown in Figure 8. In this case the shadows and lower key half tones have disappeared and the vertical retrace lines have become visible.

The circuit function of the brightness control is to establish the operating control grid bias of the picture tube.

HOLD ADJUSTMENTS: Hold adjustments, both horizontal and vertical, enable the television technician, or user, to adjust the free running frequency of the two receiver scanning systems so that a stable condition of synchronism or lock-in with the transmitted sync pulses is obtained.

In "flywheel" or A.F.C. sync systems, the hold control is of the same type, but it is placed in the grid circuit of a sine wave oscillator. Its function is to control the phase of the oscillator with respect to the sync pulses.

In the case of "triggered" sync systems, these controls are variable resistors in the scanning oscillator circuit.

HORIZONTAL HOLD ADJUSTMENT. Figures 9 and 10 illustrate the effect on the receiver test pattern of two degrees of misadjustment of the horizontal hold control. The actual appearance of the image cannot be reproduced in a printed illustration since the image is in continual motion until a stable lock-in has occurred. When the hold control is adjusted to such a position that the oscillator is nearly in sync with the signal pulses, the image will first appear as a series of diagonal bars similar to those of Figure 12, which is an illustration of horizontal oscillator frequency misadjustment. As synchronism is approached more closely, the image will appear as in Figure 9 and then start to lock-in as in Figure 10.

VERTICAL HOLD ADJUSTMENT. Figure 11 shows the effect of misadjustment of the vertical hold control. The effects on the picture are similar to those discussed for "horizontal Hold" except that, in this case, the motion of the image, before lock-in occurs, is from the bottom to the top of the picture rather than from left to right.

Careful adjustment of vertical hold is essential to avoid "pairing" of horizontal lines of alternate fields which would reduce the vertical definition of the picture.

HORIZONTAL OSCILLATOR FREQUENCY ADJUSTMENT (A.F.C. SYSTEMS). In the flywheel or A.F.C. system of horizontal sync control, the major control of the free running frequency of sine wave oscillation is the tuning of the circuit by adjusting an iron core in the inductance. The adjustment of the horizontal oscillator frequency must be re-checked if it is found necessary to change the discriminator phase control. The hold control should be set at the middle of its range while making these adjustments.

The service manuals of the television receiver manufacturers contain explicit instructions concerning the order in which these adjustments are to be made in the particular A.F.C. circuit design.

The final setting of this control should be such that, with the hold control at either end of its range, the scanning system will lock-in to signal sync. To test for this condition, tune to a signal while the control is its midposition. The hold control is then turned to its extreme position in either direction. Next the signal is removed by detuning the receiver. Upon retuning the system should pull into sync. The same check should

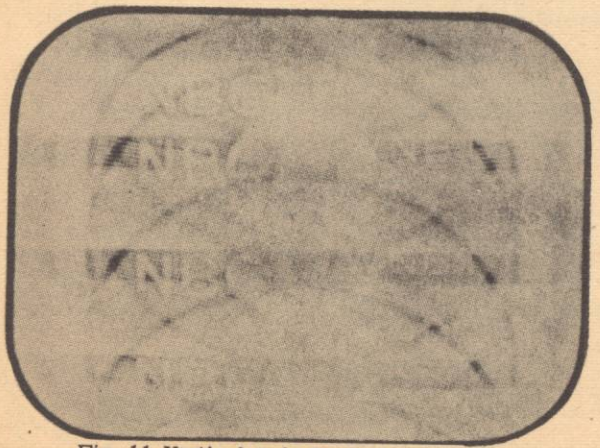

Fig. 11 Vertical Hold Control Misadjusted

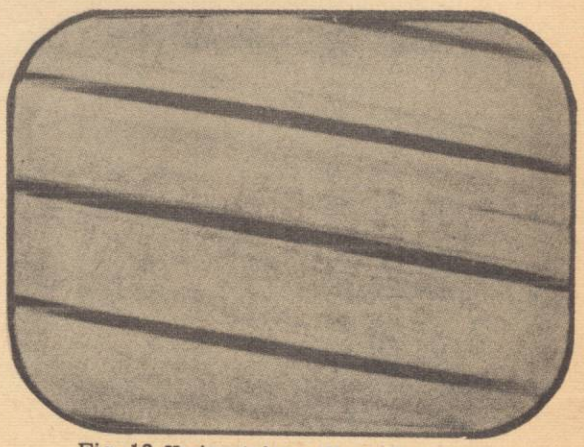

Fig. 12 Horizontal Oscillator Frequency Misadjusted

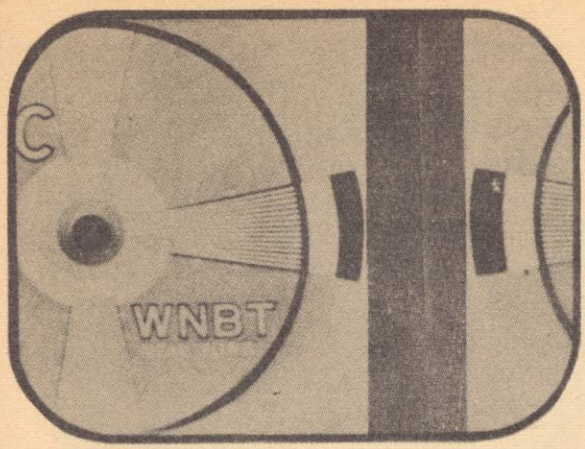


Fig. 13 Horizontal Discriminator Phase Misadjusted

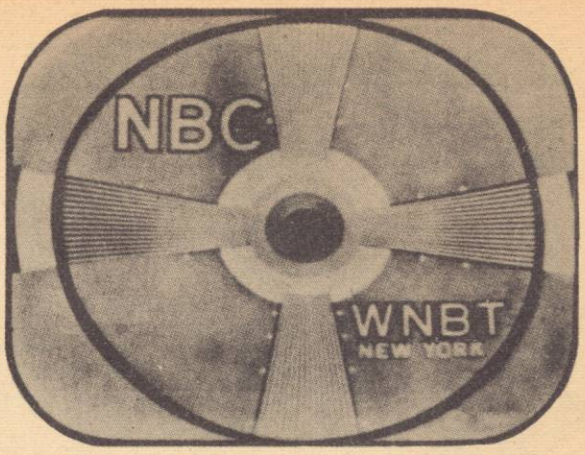


Fig. 14 Width Control Misadjusted

then be made at the other end of the control range. If the receiver will not pull into sync at both ends of the hold range, the horizontal oscillator frequency should be readjusted until this is accomplished.

HORIZONTAL DISCRIMINATOR PHASE ADJUSTMENT. The discriminator stage compares the sync pulse rate with the horizontal oscillator rate or frequency and delivers a DC voltage for the control of the oscillator. If the voltage at the plates of the two diodes, impressed by the oscillator, is equally divided, the DC output will not be zero at the correct time for retrace at the end ofthe horizontal line. This off-balance condition will result in the received test pattern shown in Figure 13.

In this case, the picture is locked-in and steady but retrace has occurred at the wrong time in the scanning cycle. The black band at the right side of the picture is the blanking period during which horizontal retrace should have occurred.

The adjustment of this control, for retrace at the proper instant, also affects the setting of the horizontal oscillator frequency adjustment as previously described. The service technician should follow the service manual of the receiver manufacturer for the proper sequence of adjustment of these controls.

PICTURE SIZE AND CENTERING CONTROLS. The group of controls which are used to fit the picture to the mask or frame are, in most instances, mounted on the back or side and are not "user" operated. Included in this group are: width, height, horizontal centering, and vertical centering.

WIDTH CONTROL. The width control adjusts the voltage applied to the horizontal deflection plates or the deflection coil. The effect on the received test pattern, when this control is not properly adjusted, is shown in Figure 14.

Width control can be accomplished by regulating the output of the horizontal oscillator, or by controlling the output of either the discharge tube or horizontal amplifier.

In many instances the width control is not a single adjustment, since the effect of changing other controls, such as *horizontal linearity and horizontal drive, may require a readjustment* of the width control.

HEIGHT CONTROL. The height control serves a similar function to that of the width control but in the vertical direction. In this case, the vertical oscillator or vertical amplifier is controlled in output.

Figure 15 shows the effect of an incorrect adjustment of the height control on the received test pattern. In this case, as well as that of the width control (Figure 14), the picture is shown as "too high", or "too wide", but symmetrical with respect to the center of the picture. Often the picture is found to be both incorrect in size and "off center". It will be necessary to adjust the size controls (width and height) simultaneously with the horizontal and vertical centering controls.

The methods and circuits employed to accomplish height control are similar to those described for width. The same page and Figure references apply.

HORIZONTAL CENTERING. Misadjustment of the horizontal centering control will cause an effect on the received test pattern similar to that shown in Figure 16.

As shown in the chart of Figure 4, two distinctly different methods of centering the picture are employed. The mechanical mounting of the focus coil may be provided with screw adjustments to accomplish both horizontal and vertical centering, or electrical circuit means for accomplishing centering may be used.

When centering is accomplished by positioning the focus coil, it may be found necessary to make readjustments of the ion trap position simultaneously with the movement of the focus coil, as previously explained.

VERTICAL CENTERING. Figure 17 shows the effect of misadjustment of the vertical centering control. As in the case of the horizontal centering control, just discussed, vertical centering is accomplished either by mechanical means (adjustment of the focus coil position) or by electrical means (voltage bias of the plates in an electrostatic picture tube or current bias in the case of an electromagnetic tube).

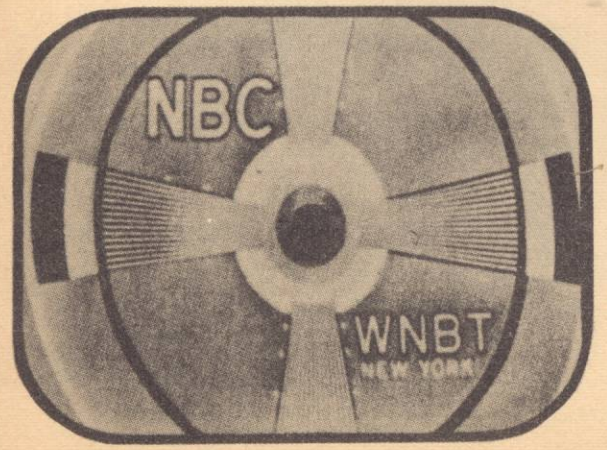


Fig. 15 Height Control Misadjusted

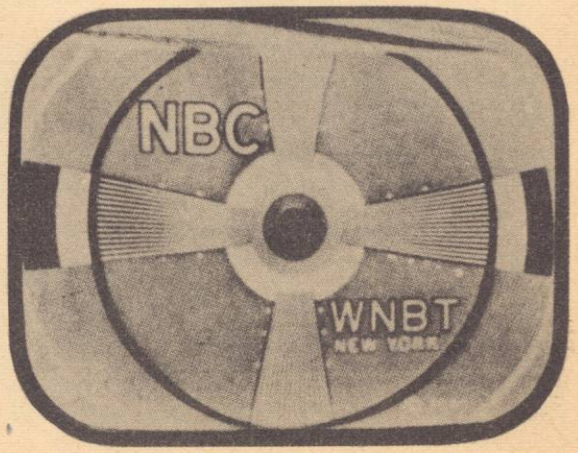


Fig. 16 Horizontal Centering Control Misadjusted

Fig. 17 Vertical Centering Control Misadjusted

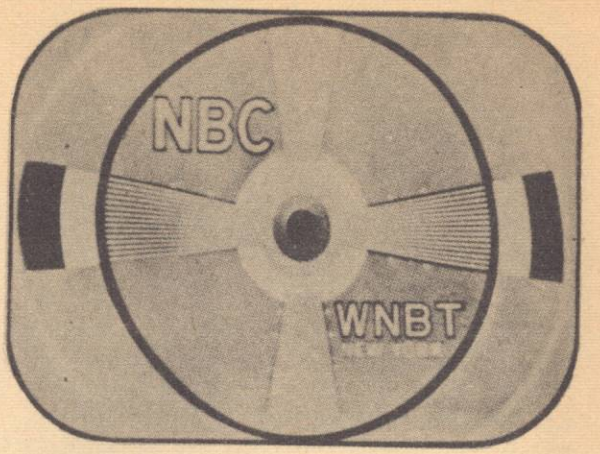


Fig. 18 Horizontal Linearity Control Misadjusted

The same text references mentioned under horizontal centering apply also to the methods employed for vertical centering.

CONTROLS WHICH AFFECT SCANNING WAVE SHAPE: The output voltage wave of scanning oscillators of the cathode-coupled multivibrator or blocking oscillator type can be made sufficiently linear to satisfactorily operate the electrostatically deflected type of picture tube and, for this reason, linearity controls are not required on sets using such tubes. In the case of magnetically deflected picture tubes, the scanning current wave consists of the combination of a linear sawtooth and a pulse. In the generation of such a wave, it is necessary to incorporate variable controls to achieve the proper time and amplitude relationship of the various sections of the wave shape. These include linearity controls, which may include as many as three for the horizontal scanning, and drive controls which adjust the amplitude of the pulse portion.

HORIZONTAL LINEARITY CONTROLS. Figure 18 shows the effect of the misadjustment of horizontal linearity. It will be noted that the circle of the test pattern has been rendered elliptical or "egg shaped". The picture has been cramped in the middle.

Correction of distortion of various parts of the picture, in the horizontal direction, are accomplished by controls affecting the circuit elements which contribute these portions of the scanning current wave. In the case illustrated by Figure 18, correction could be made by horizontal linearity control or a similar adjustment for correcting the center of the picture without affecting the sides. Additional linearity controls may be employed to correct the right hand side of the picture.

Since the number and circuit function of linearity controls differ between receiver designs, the television service technician is advised to study the service manual issued by receiver manufacturer for the particular linearity adjustment and the interaction of the control adjustment with other linearity and width controls which are invariably covered in the service literature.

HORIZONTAL DRIVE CONTROLS. The horizontal drive control adjusts the ratio of the pulse to the linear portion of the horizontal sawtooth scanning current wave. This controls the point on the scanning trace at which the horizontal output tube conducts. The effect of its misadjustment is shown by Figure 19. In effect it is seen to be an auxiliary linearity and width control, since a clockwise rotation will increase the width, crowd the right hand side of the picture and stretch the left.

Feedback is often employed in the output stage to provide a negative pulse from the horizontal output transformer to the grid of the output tube. In this case, the drive control is a voltage divider across a winding on the output transformer. The voltage pulse is fed back in series with the output tube grid return.

VERTICAL LINEARITY CONTROL. Figure 20 shows the effect on the transmitted test pattern of the misadjustment of the vertical linearity control. The type of linearity control most often employed in the vertical circuit is an adjustment of the operating point of the vertical amplifier. This usually takes the form of an adjustable cathode bias resistor. Curvature of the plate current versus grid voltage characteristic is employed to produce a "counter-distortion" which corrects any curvature of the voltage wave applied to the grid of this output tube.

In receivers which employ more than one linearity control, the secondary or additional control to that described, is made a variable resistor in the peaking circuit which constitutes the plate load of the vertical discharge tube. This control acts in a similar manner to the horizontal drive control previously discussed.

In the adjustment of linearity controls of either the horizontal or the vertical type, it should be noted that the result of adjustment is interdependent with the effect of the size (width or height) controls. This interlocking action may necessitate readjustment of one of these controls if it is necessary to adjust the other.

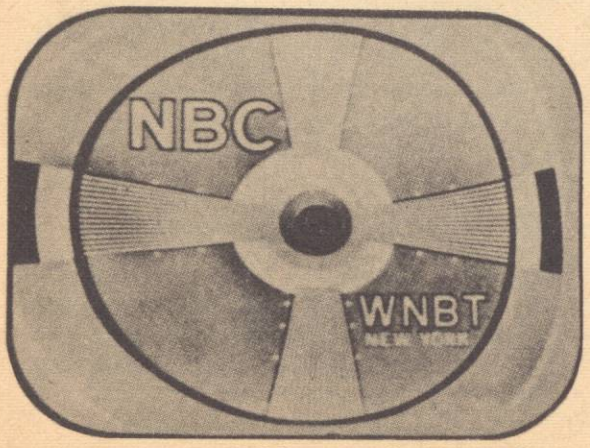


Fig. 19 Horizontal Drive Control Misadjusted

Fig. 20 Vertical Linearity Control Misadjusted

# THE CONSTRUCTION, TESTING, AND USE OF AUDIO AMPLIFIERS

## AMPLIFIER CONSTRUCTION PROCEDURE AND SUGGESTIONS

Whether an amplifier is to be used for home music installations or for public address work, the following suggestions will help toward producing a superior audio system.

The first step is to determine the parts layout and the chassis base size that will be required. When constructing any of the audio equipment described in this manual, it is suggested that the chassis view photo be followed in determining the placement of the major components. The size of the standard chassis base employed on the lab model is specified for each unit. Should a different physical arrangement of parts be required for this or any other audio equipment, the following layout procedure is applicable and should be followed for best results.

Place the component parts that are to be mounted on top of the chassis in their respective positions on the work bench and decide what size chassis is required. These parts are usually transformers, chokes, condensers, and tube sockets. Allow at least 1/2" space between the units. Greater spacing is advisable between parts that generate heat, such as power transformers, and power and rectifier tubes. Filter condensers should have one inch or more space around them when they are next to parts giving off heat.

If the power supply is to be on the same chassis, extreme care must be taken to prevent the audio transformers from picking up the A.C. field caused by the power transformer and filter choke. The power transformer and choke are usually placed at one end of the chassis and the input or microphone and interstage transformers at the other end. Hum pickup from the power transformer will be 60 cycles and from the chokes 120 cycles. The input and interstage transformers are more sensitive to A.C. magnetic fields than driver or output transformers because of the amplification that follows. Usually some of the audio components are closer to the power supply units than others. In this case the input transformer should be farthest away and the output transformer closest to the power supply, but still as far from it as possible. The position of transformers is quite as important as their location. All audio transformers should be mounted with their cores at right angles to the power transformer and choke. To do this easily the power transformer and choke can be fairly close together with cores in parallel. Then the audio transformer cores can all be in the same plane at right angles to the power units. It is also important that input and output transformers are not placed close together, inasmuch as feedback or oscillation might occur due to inductive coupling between the units.

It is quite important to arrange the layout so that all leads carrying the signal will be as short as possible. This is especially true of grid leads which are at high impedance and susceptible to electro-static pickup.

After a satisfactory layout is made the chassis size can be determined. A rough sketch of the layout should be made on paper so that the component part positions decided upon will not be forgotten. A non-ferrous metal is superior for amplifier chassis material from an electrical viewpoint. However, it is more expensive and not as strong as steel. If a steel chassis is used, it should be cadmium plated or enameled to prevent rust.

Assembly of the amplifier is usually started by mounting tube sockets, controls, transformers, and chokes on the chassis. Small bakelite strips with solder lugs can be used in some cases to support small resistors and condensers. If the strips are not available, these parts may be self supported by their leads. The use of the strips, however, tend to make a neater and more rigid wiring job and is recommended.

Proceed to wire the amplifier by starting with the filament or heater circuits. #18 stranded pushback wire is suitable. As filament or heater leads usually carry fairly high alternating currents and set up strong magnetic fields, the usual practice is to twist the leads connecting to tube sockets. This tends to reduce the field. The current travels in opposite directions in the wires and the lines of force set up around one wire cancel those of the other wire.

At this point in the construction procedure it is well to consider the manner in which the chassis ground and the B minus return circuits are connected, as this is an important factor in making the amplifier hum-free. The precautions to observe in this regard are as follows: The electrolytic filter and decoupling condenser cans as well as the low level imput (mic) connectors must be insulated from the metal chassis to avoid multiple chassis ground connections. The B minus circuit wiring should be started at the power transformer high voltage center-tap. Then, employing insulated wire, progressively join together the B minus circuits of each stage until the lowest level or input stage is reached. At a point adjacent to the input tube socket, connect the B minus circuit to the metal chassis. It is important to make only this one B minus connection to chassis ground to insure hum-free operation.

Wire the power supply and finally the small resistors, condensers, and controls. It is quite important to use shielded wire where indicated in the circuit diagrams since hum and feedback is liable to result otherwise. Where the schematic diagrams show shielded resistors and condensers, this is accomplished by first inserting the part in a piece of spaghetti tubing or wrapping with insulating material such as varnished cambric and then covering with shielding braid. The shielding of the parts so indicated is important in the reduction of hum. Shielded leads should always be short to keep down the capacity effect to ground. Capacity of long shielded leads to ground is sure to impair the high frequency response of the system.

Upon completion of the wiring, all connections should be inspected for good contacts and the circuit rechecked to see that it conforms to the schematic diagram. A continuity test or resistance analysis can be made, using the resistance data supplied with each circuit, this being done to eliminate the possibility of opens or shorts anywhere in the amplifier before connecting the primary power. When satisfied that the wiring is correct, the tubes can be inserted and the proper input and output circuits connected. Next, turn the power supply on and proceed to measure all tube electrode voltages, checking them against the voltage analysis supplied with the circuit. It is advisable to measure these voltages as well as the power output before the amplifier is placed in service. This procedure will prevent overloading of tubes or component parts due to improper adjustments, bad connections or circuit oscillation.

Due to the high power sensitivity of beam power tubes they sometimes oscillate at a high inaudible frequency if placement of leads is not correct or shielding and grounds are insufficient. Oscillation can also be caused by improper phasing of the inverse feedback circuit. Reversal of the primary leads of the output transformer will change the phase relationship of the feedback voltage. The use of an oscilloscope is recommended in determining when these conditions take place and in correcting same. The article on "Performance Testing of Audio Amplifiers" will be helpful in the proper testing of an amplifier should operation difficulties be encountered.

# ADVANTAGES OF INVERSE FEEDBACK

IN AUDIO AMPLIFIERS: A beam power amplifier to be truly modern should incorporate inverse feedback. It is a commonly recognized fact that low plate resistance tubes such as the 2A3 are superior from the standpoint of low distortion and good quality. With inverse feedback the high plate resistance beam power tube may be made to take on the characteristics of the low-mu triode, yet retain most of its high power sensitivity. The important advantages obtained by the use of inverse feedback are as follows: first, reduction of wave form distortion; second, improvement of frequency response; third, reduction of hum; fourth, reduction of "hang-over" effect; and fifth, feedback provides a convenient means of altering the frequency response or providing tone control action. The only disadvantage of inverse feedback lies in the fact that the gain is considerably reduced.

EXPLANATION OF INVERSE FEEDBACK: In the circuit of Fig. 1 a certain amount of the voltage developed in the plate circuit is fed back out of phase with the signal in the grid circuit. If without inverse feedback, a certain voltage Eo is developed across the output circuit with an input voltage $E_1$ the gain of the stage is $E_0$ divided by $E_1$. If now a certain percentage N of the voltage $E_0$ is fed back to the grid circuit in such a way that the voltage is out of phase with the input voltage $E_1$ the total input voltage to obtain an output voltage of $E_0$ is $(N E_0 + E_1)$ and gain of the stage is $E_0/(N E_0 + E_1)$. The ratio N is the percentage of the output voltage which is fed back to the input circuit. It may be readily seen that if N is large, the gain of the stage depends more upon N than upon the circuit constants.

The ratio reduction in gain by the addition of inverse feedback may be readily determined by dividing the gain without feedback by the gain with feedback.

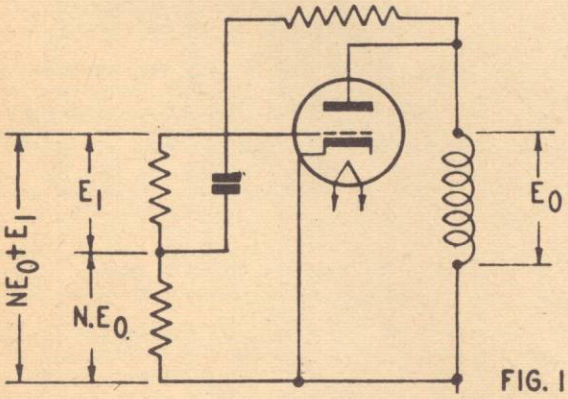


FIG. 1

Fig. 1 illustrates a common method of applying inverse feedback across a single ended output stage. Fig. 2 shows a method of applying feedback across a push pull output stage using a resistor condenser network. The amount of inverse feedback is equal to $R_1/(R_1+R_2)$ assuming that the reactance of the condenser $C_1$ is negligible over the operating frequencies. The application of inverse feedback need not be limited to one stage. The feedback loop can include several stages as employed in the 25 watt amplifier described on page 146. Here a portion of the output voltage from the secondary of the output transformer is applied back in the proper phase to the cathode circuit of the mixer stage. Thus all of the stages within the feedback loop obtain the above mentioned advantages that inverse feedback affords.

REDUCTION OF DISTORTION: As was pointed out in the preceding paragraph, an inverse feedback circuit feeds back a certain portion of the output voltage to the grid circuit. If distortion is introduced in the amplifier stage, a certain amount of the distorted voltage will be fed back into the grid circuit and this will tend to cancel out the distortion developed in the amplifier stage. If in the circuit of Fig. 1 a certain amount of distortion voltage B is present in the output circuit, the distortion voltage fed into the grid circuit will be N x B and this quantity multiplied by the gain of the stage will give the cancelling effect of the inverse feedback. The total distortion present in the output is then equal to the sum of the distortion without inverse feedback and the distortion cancelled by the inverse feedback. In other words, if b is the distortion without inverse feedback, the total distortion, B, with inverse feedback is equal to $(b+B)xNxA$, where A is the gain of the stage. Evaluating B gives the quantity $b/(1+NA)$. In other words the distortion is reduced by the ratio of $1/(1+NA)$.

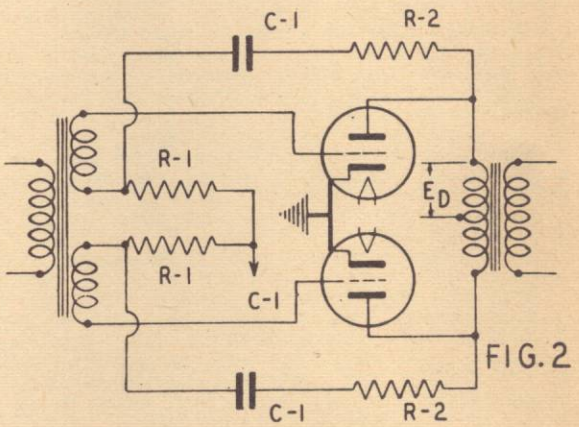


FIG. 2

REDUCTION OF PLATE RESISTANCE: In addition to the reduction in distortion obtained by inverse feedback, there is also a reduction in the effective plate resistance of the tubes. A high plate resistance is a definite disadvantage in the case of a power tube which operates into a speaker load which is more or less variable depending upon the impedance of the voice coil. In the circuit of Fig. 3, it may be easily seen that the voltage E developed across the load depends a great deal upon the actual value of $R_L$ which is the reflected impedance of the voice coil. This is due to the fact that the signal current depends almost entirely upon the high plate resistance of the tube. Since the load resistance is low in comparison to the plate resistance, the voltage developed across the load is almost directly proportional to the impedance of the load which varies appreciably with change in frequency. In Fig. 4 it may be seen that the voltage across the load does not vary so much since the signal current depends both upon the load and upon the plate resistance of the tube. If the voice coil has an appreciable amount of reactance, the impedance rises with the frequency, causing distortion and giving an unnatural amount of "highs". The high plate resistance is unsuitable from another viewpoint, that of the amount of low frequency distortion which may be tolerated. This low frequency distortion is not due to the tubes which remain unchanged regardless of the frequency, but depends upon the magnetizing current in the output transformer. The magnetizing current is a distorted nonsinusoidal wave and this current, on flowing through the high plate resistance of the tube, develops a nonsinusoidal voltage drop across the tube which, when subtracted from the input signal, results in a distorted wave across the output. Unfortunately, most amplifiers today are measured for distortion at 400 cps where the magnetizing current is practically negligible. It is not uncommon to find beam power amplifiers without inverse feedback which have only 25 per cent of the rated power at 40 or 50 cycles. This low frequency distortion is particularly objectionable since

all harmonics fall within the audible range. Inverse feedback effectively reduces the plate resistance so that the distorted voltage drop caused by the magnetizing current is exceedingly small, with the result that there is very little distortion across the output circuit. With a poor output transformer it is quite possible for the distortion to be as high as 30 per cent at 40 cycles without inverse feedback.

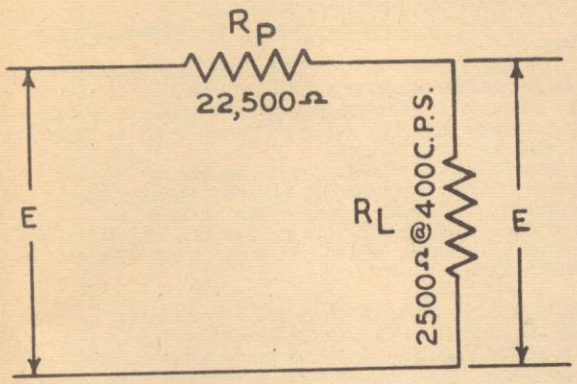


FIG. 3

"HANGOVER" EFFECT: "Hangover effects", or transients caused by the loud speaker cone vibrating at its natural period when shock excited, are greatly reduced by the use of inverse feedback. The lower plate resistance provides a considerable amount of damping so that the oscillations or transients are reduced. With regular beam power tubes the shunting effect of the tube is exceedingly small with the result that the damping is negligible. As a result, unnatural "boominess" may result when the speaker is shock excited and the cone vibrates at its own natural period. The natural period depends upon the physical construction of the speaker and is usually in the neighborhood of 50 to 150 cycles.

REDUCTION OF HUM: Hum originating within the feedback loop is cancelled out in much the same way as distortion since the hum developed in the stage or stages included within the loop and the voltage feed into the grid circuit are out of phase and tend to cancel. It must be remembered however, that distortion or hum originating in a stage outside the feedback loop will not be reduced by inverse feedback. Great reductions in plate circuit distortion and plate resistance may be obtained by the use of large amounts of inverse feedback. However, the limiting factor in inverse feedback, assuming there is negligible phase shift occurring in the stages over which feedback is applied, is the amount of desired gain from the stage in question. In actual design, the amount of inverse feedback is a compromise between the gain and the desired reduction in distortion. If there is enough gain in the previous stages and if the driver tube can supply the necessary peak voltage, it will be advisable to increase the amount of inverse feedback in order to reduce the plate resistance and the plate circuit distortion. However, if the plate resistance is fairly low and if the plate circuit distortion is a reasonable value, there is not much advantage gained in further reducing the gain by the addition of more inverse feedback.

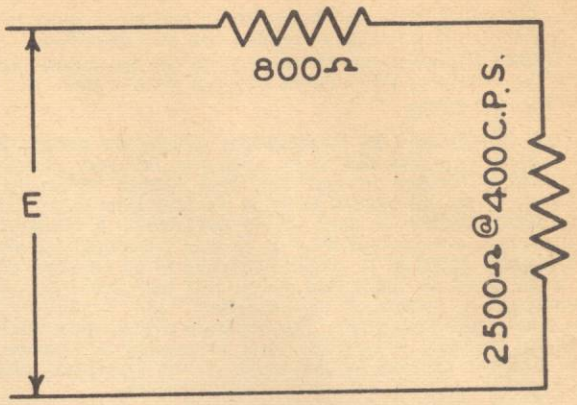


FIG. 4

USE OF INVERSE FEEDBACK TO ALTER FREQUENCY RESPONSE: Inverse feedback can be advantageously utilized for equalization or tone control purposes. An excellent example of this application of inverse feedback is described on page 156, the article titled "dual Tone Control". Here a large amount of inverse current feedback, commonly referred to as cathode degeneration, is applied to a single stage. Then, by means of an inductance or capacity shunted into the cathode circuit, the amount of degeneration or inverse feedback applied at either low or high frequencies can be controlled. Thus, by making the feedback selective with frequency, the stage gain as versus frequency characteristic may be adjusted to produce the curves shown on page 157.

The high fidelity 10 watt Phono-Tuner amplifier described on page 144 also employs inverse feedback to obtain tone compensation. In this circuit a portion of the output voltage is fed back to the input cathode of the phase inverter stage. Bass boost is obtained by inserting a .005 mfd. condenser in series with the feedback loop. A lifting or boosting of the bass frequencies occurs because the reactance of the condenser increases at low frequencies, which reduces the amount of inverse feedback. This results in greater amplification in this portion of the audio spectrum. The 1 megohm control shunting the .005 condenser controls the amount of bass boost obtained. Maximum boost occurs when the control arm is in the counter-clockwise position. A treble boost is obtained in this circuit by shunting the 6SL7 input cathode resistor with an .03 mfd. condenser. The boosting of the treble or high frequencies occurs due to the lower reactance of this cathode condenser at high frequencies; this effectively shorts the cathode impedance reducing the amount of inverse feedback and hence raising the gain in this frequency range. Maximum boost occurs when the arm of the 500k control is at ground. Normal response is obtained when the control is in the center position. This same control provides conventional treble cut or attenuation action when the arm is in the maximum counter-clockwise position.

In this tone control system the frequency at which maximum response occurs can be controlled by the proper choice of condenser values. The maximum amount of boost in turn is dependent upon the amount of inverse feedback initially applied across the amplifier circuit.

The 6SC7 pre-amplifier stage of this circuit also utilizes selective voltage feedback applied from plate to plate to obtain the bass equalization required for operation with magnetic phono pickup cartridges.

# PERFORMANCE TESTING OF AUDIO AMPLIFIERS

The following ideas and suggestions will be of great help to the Sound Man who builds or repairs his own amplifiers. They are the results of long experience in the laboratory and in answering letters on this subject from our many friends and customers.

TEST INSTRUMENTS REQUIRED: There are certain basic test instruments that should be available to every sound man and certain routines in their use that should be known and followed, if the full benefit is to be secured from them. These instruments include a good audio oscillator, a cathode ray oscilloscope, a selection of 50 or 75 watt resistors with values of 500 ohms or equal to output impedances to be used (these are to be used as substitute voice coil and line loads when measuring the output of an amplifier), and a vacuum tube voltmeter with a high range. For accurate overall gain measurements an accurate micro-volt meter is needed to measure the audio voltage applied to the input of the amplifier, and an output meter with no frequency discrimination.

ELIMINATION OF HUM: One of the first problems encountered by the constructor is the elimination of Hum from an amplifier. The oscilloscope is very useful in determining the frequency of the Hum, its location, and when it has been reduced to a negligible quantity.

To determine the frequency of hum, feed a portion of the output of the amplifier to the vertical input of the oscilloscope. Turn the sweep selector switch to "60 cycle". A 120 cycle hum will produce some form of a figure eight on the screen of the cathode ray tube as shown in Fig. 1. This indicates that the hum is coming through the power supply circuit, and is caused by lack of filtering or isolation of the different stages. On the other hand, a 60 cycle hum, usually picked up by induction in the wiring, transformers or chokes will produce some form of circle - no crossing of lines. (Fig. 1)

The best procedure in checking hum is to pull all tubes but the outputs and clear up any hum that originates in that stage. Next insert the correct tubes and proceed to the driver stage, the interstage and the inputs successively. It will usually be found that hum is picked up most often in the input stages. For this reason they must be well shielded. Notice that the resistors and leads associated with this portion of the circuit are usually shown as being shielded in the diagrams. This is important in the elimination of hum and cross talk between inputs. Such simple things as the placement of leads, transformers, tone control chokes, etc., will affect the amount of hum present in the amplifier. Any defective condensers in the filter circuit will usually be shown at the first of the test and of course should be replaced with perfect units.

On the oscilloscope, the height of the image on the screen is a measure of the amount of hum. This is shown in Fig. 1 as the distance "a" - "b". NOTE: This height is affected by the voice coil impedance across which the tests are made. The greater the impedance, the easier it is to detect hum on the oscilloscope. The ear will of course tell when hum is no longer noticeable, but will not aid sufficiently in the location and elimination of the source. Tube hiss, which will appear after a gain of approximately 100 db has been reached, should not be confused with hum.

CHECKING FOR OSCILLATION: Another source of trouble, especially in modern high gain amplifiers and those using an inverse feedback circuit, is parasitic oscillation.

If the transformers shown on the parts lists in this guide are used, and the circuit diagrams and various constants are followed, there can be but one main reason for oscillations. This is the reversal of the primary winding of the output transformer. All other sources of oscillation have been carefully eliminated.

The following suggestions for the curing of oscillation are given for the benefit of those building their own amplifiers from parts other than those recommended in this guide.

1. Complete shielding of the entire wiring of the final stage.
2. Insert a 200 ohm 1/2 watt resistor in each output tube grid lead.
3. Connect a .001 mfd., or smaller, condensers from the output stage grid leads to ground, or the junction of the above mentioned 200 ohm resistors to ground.
4. Connect a by-pass condenser across the self bias resistor.
5. Insert 10,000 ohm or larger resistors across each half of the secondary of the driver transformer.
6. Connect a resistor across the total secondary of the driver transformer, the value to be as high as possible and still stop the oscillations.

A simple test procedure for the source of oscillation is as follows: First, reverse the primary winding of the out-put transformer. Second, remove the inverse feedback system entirely to make certain this part of the circuit is or is not responsible. Third, try the various circuit changes as previously outlined.

DISTORTION MEASUREMENTS: The most popular way to check the distortion in an amplifier is shown in Fig. 2. The output of the amplifier is fed to the vertical input of the scope and an audio signal with a sine wave characteristic is fed to the input of the amplifier. Since a sine wave is uniform, any deviation from it is easily recognized.

It is not possible to distinguish distortion on the oscilloscope below 5 tp 6 per cent. The only distortion which may be readily seen with this method is the flat top wave. This flat top may be caused by operating into the curved portion of the tube characteristic in the case of triodes or by using too high a plate load in the case of a pentode. Driving a class A or AB power stage so heavily as to draw grid current will also cause this form of distortion.

Where distortion is present, the leads from the vertical input of the oscilloscope should be moved to the output and input of each successive stage, beginning with the final, until the defective one is located.

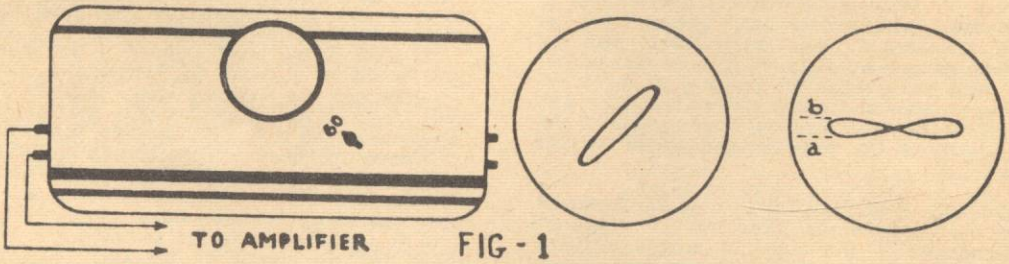

FIG - 1

OUTPUT MEASUREMENTS: Output measurements are usually taken across a resistor, substituted for the impedance which would usually be connected to the secondary. Use an accurate output meter when making these measurements. From the formula Power (Watts) equals $E^2/R$, it is then easy to compute the output of the amplifier.

An oscilloscope is almost a necessity in measuring power output if usable output is to be considered. Most amplifiers are capable of considerably higher output than their usual rating, but with high distortion. An output with a maximum distortion of less than 8% is all that is really useful.

Connect the vertical input of the oscilloscope across the same load resistor that is used for the output voltage measurements. Increase the output, through the use of the gain control, until the sine wave from begins to distort. Back the gain until no noticeable distortion is present, then take the output voltage reading. The oscilloscope will begin to show distor- when about 6% is present.

A point often forgotten is that an amplifier passes many frequencies, thus the watts output should be fairly constant over the entire frequency range if the amplifier has any quality

at all. An amplifier with 25 watts output at 400 cycles should also deliver 25 watts with no noticeable distortion at 50 cps and to at least 8,000 cps. These measurements are not possible unless the laboratory equipment previously mentioned is available.

GAIN MEASUREMENTS: No rating can be so abused as the db gain of an amplifier. This is true because of the nature of the measurements involved. The decibel is a unit of power measurement so the resistance across which the voltage measurements are computed will influence the mathematical, not the actual, result.

To compute the overall gain, a carefully measured input voltage is applied to the input of the amplifier and the output voltage measured. The gain is figured in decibels through the use of the formula db = 10 log. $P_o/P_I$, where $P_o$ is the power output and $P_I$ is the power input.

The output voltage is usually read across the load resistor mentioned at the beginning of this article. The input voltage is fed into the regular input, which is usually a 1 or 2 megohm resistor.

It is this input resistor that can play havoc with the gain measurements. Although its value is 2 megohm, purposely a large value to prevent loading of the microphone, such a value is never encountered as an actual grid load. When shunted by the microphone or other input source, the resultant impedance is much less. For this reason the secondary impedance of the usual transformer, 100,000 ohms, is the generally accepted figure used in gain computations. An actual input impedance of 5 megohms would obviously ruin the high frequency response of the stage involved. The calculated db gain will be less with 100,000 ohms but it will be more indicative of the usable gain. Always state the constants used when speaking of db gain. Although a higher db gain will be shown by using a value of 5 megohms rather than 100,000 ohms in the computations, the actual gain from microphone to speaker will be the same under either condition.

is the correct value for the 500 ohm line. In this case, if the total power supplied to the 500 ohm line is 30 watts, each speaker will take one-third of this, or ten watts. If this power is to be divided so one speaker receives 15 watts, one 10 watts and one 5 watts, one must make a change in the ratio of the three transformers.

The voltage developed across the 500 ohm line is 122 volts ($W = E^2/R$; $W = 30$, $R = 500$, $E = \sqrt{15{,}000}$ or 122 volts). Given the voltage across the 500 ohm line and the voltage required across each voice coil for the desired amount of power, it is an easy matter to determine the turns ratio and the impedance ratio necessary in the various transformers.

For the first speaker, requiring 15 watts of audio, the voltage across the voice coil is 12.25 volts; ($W = E^2/R$; $W = 15$, $R = 10$, $E = \sqrt{10 \times 15} = 12.25$ volts). Similarly, the voltage across the speaker requiring 10 watts is 10 volts and the voltage across the speaker requiring 5 watts is 7 volts. The turns ratio of the various transformers is 122/12.25 or 10:1. Also 122/10 or 12.2:1, and also 122/7 or 17.5:1. The impedance ratio of the transformer is the turns ratio squared and the actual primary impedance is equal to the turns ratio squared, multiplied by the voice coil impedance of 10 ohms. The reflected primary impedances are all different. However, when the three are parallel, they result in an impedance of 500 ohms, which is the correct value for the 500 ohm line. In this case, the power delivered to each of the speakers is entirely different from the condition under Fig. 1.

It must be remembered when using this method of calculation the total power in the individual voice coils must total the power in the primary from which the value of primary voltage was computed.

Frequently it is not possible to match the impedance of the speaker exactly. Whenever this is not possible and whenever there is a sufficient number of taps on the output of the amplifier, it should be connected in such a way that a lower plate to plate load than normal is reflected. In other words, if it is necessary to match a 15 ohm speaker to an output transformer which has a 16 ohm tap and a 14 ohm tap, the 15 ohm speaker should be connected to the 16 ohm tap. This will reflect a somewhat lower value of plate to plate load so that it is possible to obtain slightly more power from the amplifier although the distortion will be somewhat greater at the peak output. This is much better than connecting the 15 ohm speaker to the 14 ohm tap, thus reflecting a higher plate to plate load and causing the amplifier to overload at a much lower value of power output. This is especially true of pentode and beam power tubes, where the higher value of plate to plate load will result in a flat top wave and severe distortion.

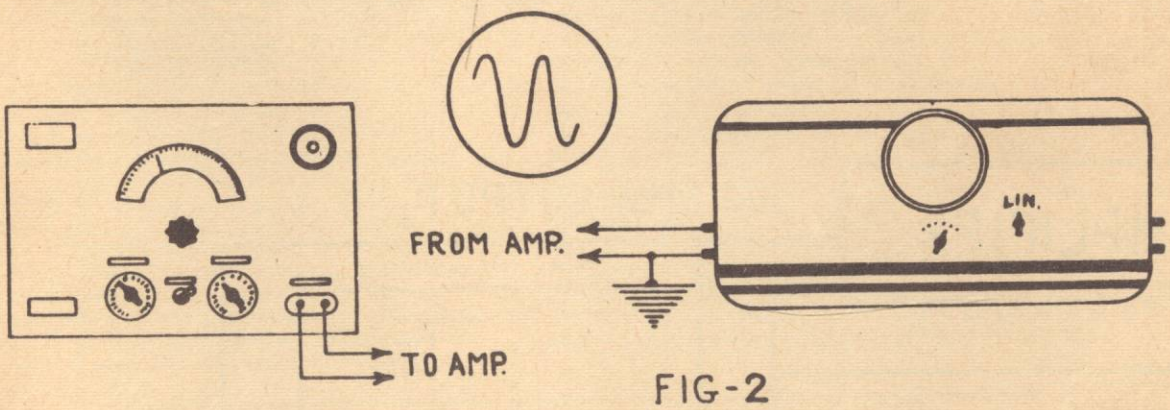


FIG-2

## IMPEDANCE MATCHING IN MULTISPEAKER SOUND INSTALLATIONS

For amplifier installations where some, or all, of the speakers are to be located at a distance from the amplifier, experience has shown that the installation of a 500 ohm transmission line offers greatest economy of sound energy, maximum ease of securing accurate impedance matches, and freedom from attenuation of any desired signal frequencies.

Most amplifiers are provided with 500 ohm output terminals in addition to the low impedance voice coil terminals for this purpose.

IMPEDANCE MATCHING OF SPEAKERS WITH UNEQUAL POWER RATINGS: It is frequently necessary to match a number of speakers to a 500 ohm line in such a way that the speakers take unequal power. It is an easy matter to connect a number of speakers to a 500 ohm line so that each speaker takes the same amount of power, and it is also an easy matter to determine the correct impedance ratio of each line to speaker transformer. In Fig. 1, if each of the speakers has a voice coil impedance of 10 ohms, the impedance ratio of the transformers should be 1500:10 so that the three 1500 ohm impedances in parallel will give an impedance of 500 ohms, which

TRANSFORMERS AS IMPEDANCE CHANGERS: The transformer is an impedance changer and as such it is not necessarily associated with any one value of impedance. In other words, if a transformer is designed to couple a 500 ohm line to a 10 ohm voice coil, the impedance ratio of the transformer is 50:1, and the same transformer for all practical purposes will just as effectively couple a 1000 ohm line to a 20 ohm coil or a 250 ohm line to a 5 ohm voice coil, provided, of course, that the power handling ability of the transformer is not exceeded.

The only serious result of using the primary of a transformer for an impedance other than that for which it was designed is the changing of the frequency response of the transformer and its operating efficiency. In other words, a transformer designed for 500 ohms operation has a certain amount of inductance, which, when used with a 1000 ohm line, will give poorer low frequency response and better high frequency response. On the other hand, a transformer designed for 500 ohm operation when used on a 250 ohm line, will provide better low frequency response but the high frequency response will drop off considerably.

Thordarson line to voice coil transformer, TS-24S62, may be used to reflect a primary impedance from 500 to 3000 ohms. It has been designed with high primary inductance and low leakage so that the frequency response is good over this range. The secondary has a number of taps, making it possible to match practically any voice coil impedance or obtain any desired turns ratio. The accompanying table indicates what turns and impedance ratios may be obtained as well as the voice coil impedances when one to six transformers are connected in parallel to a 500 ohm line. The table will aid in connecting voice coils of the same or different impedance where the distribution of power is equal, without the above computation. Only one speaker should be connected to each transformer.

Thordarson transformer T-22S80 will couple a 500 ohm line to voice coils having 4, 8 or 15 ohms impedance. It is possible to connect several speaker voice coils to one of the T-22S80 transformers. If the voice coils have 15 ohms impedance each, two of them could be connected in parallel to the 8 ohm tap. Four 15 ohm voice coils can be wired in series parallel to the 15 ohm tap or in parallel to the 4 ohm tap.

The wires connecting the transformer to the speaker coil should not be any longer than necessary. Long voice coil leads result in loss of power and low frequencies. Heavy wire should be used if the transformer is separated from the speaker by more than a foot.

Table for Connecting Dynamic Speakers of Various Impedances in Same Output System
Secondary Matching Impedance TS-24S62 Transformer

| Secondary Terminals | No. of Transformers Paralleled Across 500-ohm Line 1 | 2 | 3 | 4 | 5 | 6 |
|---|---|---|---|---|---|---|
| 2 - 4 | .06 | .1 | .2 | .2 | .3 | .4 |
| 5 - 6 | .1 | .2 | .4 | .5 | .6 | .7 |
| 2 - 5 | .2 | .4 | .7 | .9 | 1.1 | 1.3 |
| 4 - 6 | .3 | .6 | 1.0 | 1.3 | 1.6 | 1.9 |
| 3 - 6 | .4 | .7 | 1.1 | 1.4 | 1.8 | 2.1 |
| 2 - 6 | .6 | 1.2 | 2.0 | 2.7 | 3.4 | 4.0 |
| 6 - 7 | .7 | 1.4 | 2.2 | 2.9 | 3.6 | 4.3 |
| 1 - 2 | 1.3 | 2.7 | 4. | 5.4 | 6.8 | 8.1 |
| 1 - 3 | 1.7 | 3.3 | 5. | 6.7 | 8.4 | 10. |
| 1 - 4 | 2. | 4.0 | 6. | 8. | 10. | 12. |
| 3 - 7 | 2.4 | 4.8 | 7.2 | 9.6 | 12. | 14.4 |
| 1 - 5 | 2.6 | 5.3 | 8. | 10.6 | 13.3 | 16. |
| 2 - 7 | 2.8 | 5.6 | 8.4 | 11.2 | 14. | 16.8 |
| 1 - 6 | 4. | 8. | 12. | 16. | 20. | 24. |
| 1 - 7 | 8. | 16. | 24. | 32. | 40. | 48. |

The numbers in the table correspond to the individual voice coil impedances of each speaker.

Voice coils in series:
Total impedance in ohms - $Z_1 + Z_2 + Z_3$

Two voice coils in parallel:
Total impedance in ohms - $Z_1 Z_2 / Z_1 + Z_2$

More than two voice coils in parallel:
Total impedance in ohms - $1/\frac{1}{Z_1} + \frac{1}{Z_2} + \frac{1}{Z_3}$

Voice coils in series parallel:
Total impedance in ohms $= \dfrac{1}{\dfrac{1}{Z_1+Z_2} + \dfrac{1}{Z_3+Z_4}}$

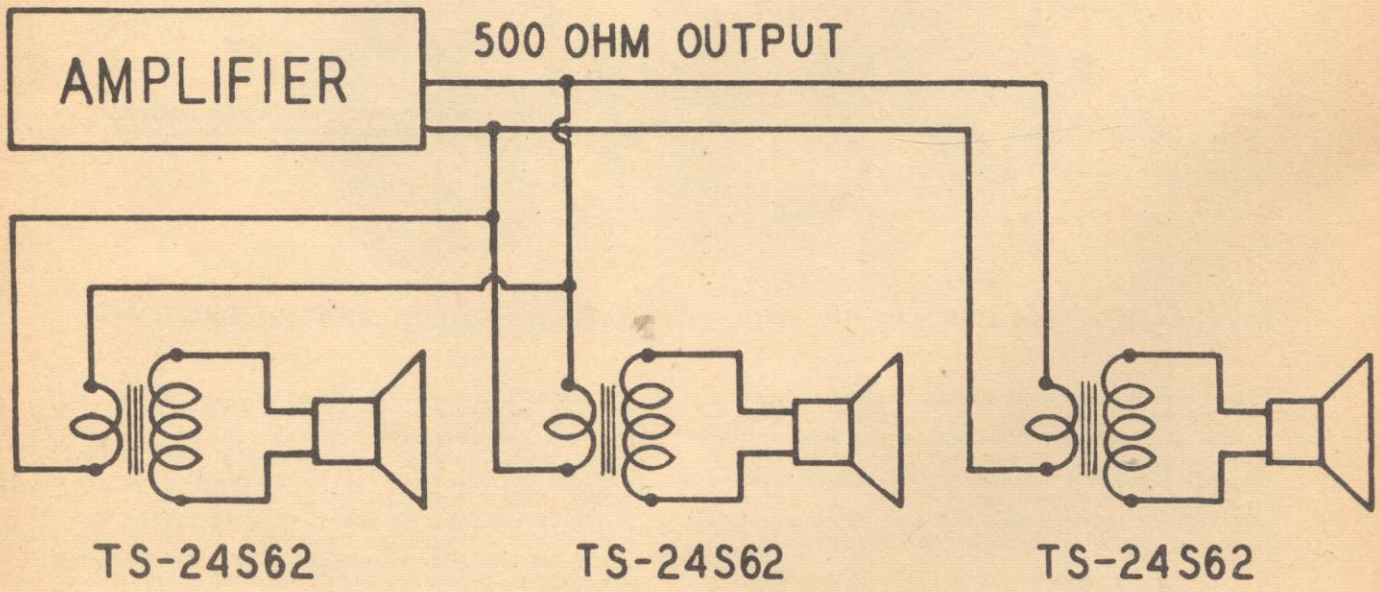


FIG. 1

# LOUDSPEAKERS

## FACTORS IN THEIR SELECTION AND USE

By

TECHNICAL SERVICE DEPARTMENT

JENSEN MANUFACTURING COMPANY, CHICAGO

### SOUND AND SOUND WAVES

A disturbance having components in the audio frequency range travelling through the air, which of course the human ear can detect or "hear", is known as "sound" or a "travelling sound wave". It is usual to have a number of such sound waves, often from several sources and from different directions, combining at any one place; that is, sound is usually a complex combination of a number of simple waves.

Since we are here only interested in home reproducing systems we need only consider sound waves in air. A logical question is why and how do sound waves travel? Air is a fluid medium having uniformly distributed mass and stiffness. In such a system, a disturbance is transmitted through the medium just as would a disturbance in a system of interconnected springs and weights.

In the case of a simple wave, the direction of travel and intensity of the transmitted wave depend on the direction and intensity at the source which in turn depend on the nature of the device causing the disturbance. The intensity of the transmitted disturbance or travelling wave decreases uniformly as it travels for reasons we will not describe here because it has no importance except in outdoor sound systems or in large theatre and auditorium reproducing systems.

The above described transmission of a sound wave away from a source is called "radiation"; that is, the sound is said to be "radiated" by the source. Now when a sound wave is radiated into a room the wave is reflected when it reaches a wall just as light is reflected from a mirror in a certain direction depending on the angle at which the wave strikes. If the wall is hard, such as would be the case for a concrete or painted plaster wall, the wave is reflected with very little loss in its intensity. Sound waves will not be reflected from rather small objects such as posts, however, but rather will merely bend around them with little change. If the wall is soft as in the case of a carpetted floor, a portion of the sound energy is lost; the carpet is said to have "absorbed" some of the sound energy. The remaining portion of the sound wave energy is reflected. Sound absorption also occurs due to soft objects in the room such as upholstered furniture and people. The greater the total surface of soft material exposed to the sound wave the greater will be the sound absorption. In any room, the sound will continue to travel about the room until it is completely absorbed. The time required for a loud sound to be absorbed enough so that the human ear can no longer hear it, is sometimes called the "reverberation time".

From the above discussion it becomes apparent that the sound at any one place in a room is a complex thing being the summation of many components from many directions. It can be considered as made up of two major components: (1) the "direct" sound radiated directly from the source to the position in question, and (2) the "diffuse" sound which is the summation of the reflected sound coming from all directions.

### LOUDSPEAKERS - WHAT THEY ARE AND HOW THEY OPERATE

Fudamentally a loudspeaker is a device for converting audio frequency electrical energy, such as that supplied by the output of an audio amplifier, into acoustical energy or sound waves in the air. This conversion must be accomplished so that the sound waves are a faithful reproduction of the electrical waves supplied to the loudspeaker. This discussion will be limited to a class of loudspeakers known as "moving-coil loudspeakers" since this is the only type now used to any extent which has the ability to perform this function in a satisfactory manner.

The most common loudspeaker type in use today, in the above class, is the "direct-radiator", or "cone-type" loudspeaker. Here a relatively large vibrating structure, often called the "cone" or "diaphragm", radiates a sound wave directly into the air due to its vibration. This radiating structure is usually conical in shape, or nearly so, and is flexibly supported both at its outer edge and near its apex. A cylindrical coil of wire known as the "voice-coil" is rigidly fastened to the cone near its apex; this coil is immersed in a fixed radial magnetic field supplied by a magnetic structure. Now when a current flows through the voice coil it reacts with the magnetic field thus setting up a force along the axis of the coil; this force causes the cone to move in a direction depending on the direction of the current in the coil. The force varies as the current varies in amplitude. Thus an audio frequency electrical signal current causes the diaphragm to vibrate at the same frequency and with an amplitude depending on the value of this current. Figure 1 illustrates these functional parts. The diaphragms of direct-radiator loudspeakers are usually fabricated or moulded of special paper-like material.

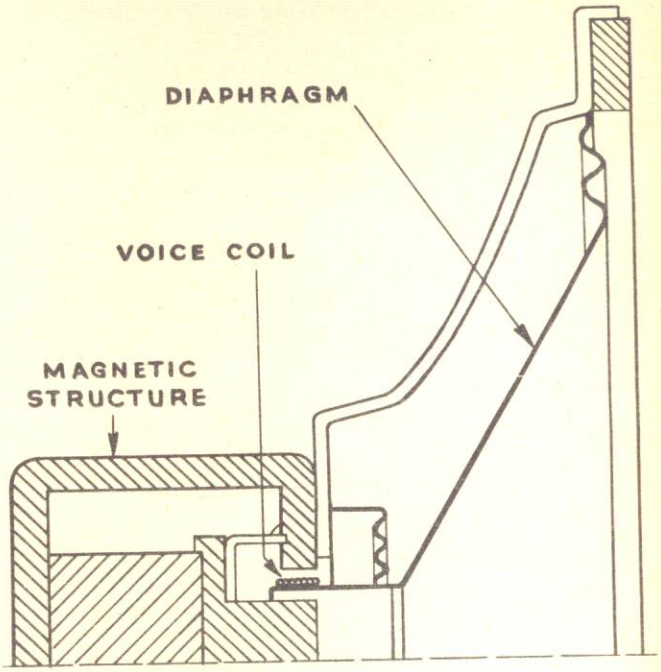


Figure 1. Simplified Direct-Radiator Loudspeaker.

### MAGNETIC FIELD STRUCTURES

As discussed in the above description of loudspeaker operation, the voice coil is suspended in a fixed radial magnetic field. As noted, this field is supplied by the "magnetic structure". Two types of magnetic structures are in common use: (1) "permanent magnet" or "PM", and (2) "field coil" or "electromagnet".

In the first case a permanent magnet is incorporated in a soft iron case; the magnet is "charged" by placing the finished loudspeaker or the magnetic structure in a very strong magnetic field. When this field is removed a certain fixed magnetic strength is retained causing the magnetic field across the "air gap" in which the voice coil is suspended.

All modern loudspeakers of the permanent magnet type incorporate magnets with specified and carefully controlled metallurgical composition. These magnets do not deteriorate with time and these loudspeakers are therefore highly recommended.

An electromagnet structure differs in that a coil of wire is incorporated in the soft iron structure. A magnetic field appears across the air gap when a direct current is passed through the coil of wire. The field strength is increased as the current through the coil is increased.

In both of the above types the soft iron structures are used to their full capabilities for the particular permanent magnet or field coil used. Therefore there is no reason for choosing either one from a performance standpoint. The permanent magnet loudspeaker is simpler, requiring no external power to create the magnetic field but is a little more costly in the large sizes. Manufacturers of radio equipment often use the field coil type and "energize" the field coil from the plate power supply for the tubes.

## HORN TYPE LOUDSPEAKERS

A second general type of moving-coil loudspeaker is known as the "horn type" loudspeaker. Here the vibrating structure, usually known as the "diaphragm", is relatively small in size and does not radiate directly into the air. Figure 2 illustrates the functional nature of such a loudspeaker. A flaring tube called a "horn" is connected to the diaphragm so that the sound energy created by the diaphragm enters the small end of the horn, called the "throat" from the "sound chamber" which is the space directly in front of the diaphragm. The sound wave then travels along the flaring horn

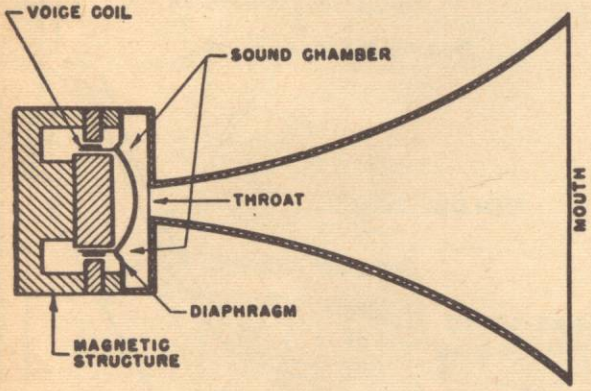


Figure 2. Simplified Horn Type Loudspeaker.

expanding as it travels until it is radiated into the air from the large end of the horn, known as the "mouth". The effect is that of a large vibrating member at the horn mouth which can thus radiate more easily into the air.

A horn may also be considered essentially as an acoustic transformer. It matches the mechanical impedance of the small diaphragm to the mechanical impedance of the air just as impedances are matched in electrical circuits. The flaring or expansion of the horn is at some specific rate determined by exact mathematical formulas.

The diaphragm of horn type loudspeakers is usually supported only at its periphery and much less flexibly than in the case of the direct-radiator type loudspeaker. It may take many sorts of shapes, usually not conical. The diaphragm is usually made of some thin light weight metal or of phenolic materials. It is also driven by a voice-coil which is in turn suspended in a fixed magnetic field. The assembly comprising the diaphragm, voice-coil and magnetic structure; that is the assembly exclusive of the horn, is called the "driver unit" and is often referred to as a "compression-type" driver unit.

## SINGLE CHANNEL LOUDSPEAKER SYSTEMS

In the usual radio receiver, a single direct-radiator loudspeaker is used. This unit must reproduce the complete frequency range required. Stated in another way, the frequency range resulting is no greater than the loudspeaker can reproduce. It is unfortunate that in general much too small a portion of the total cost of the receiver is alloted to that vital link - the loudspeaker. The usual loudspeaker used for this application has no special characteristics. However, single direct-radiator loudspeakers are now generally available which offer definite advantages over the "garden variety" for these applications; they are known as "Extended Range" or "High-Fidelity" loudspeakers.

Despite the simplicity of the direct-radiator loudspeaker, it is difficult to achieve smooth acoustic output to very high frequencies and still maintain the other desirable characteristics. However the high fidelity single direct-radiator loudspeakers mentioned above meet many of the basic requirements of high fidelity systems discussed later. They are available in all sizes and represent the best performance available for minimum cost and are highly recommended where the more elaborate systems may not be feasible.

In some cases two or more loudspeakers each connected directly to the amplifier and reproducing the full frequency range are used. This arrangement increases the power-handling ability and maximum available low frequency output as will be described later. Also extension loudspeakers are used extensively so that music is available at several places remote from the basic equipment. Here again each loudspeaker must reproduce the whole frequency range resulting. This practice is also recommended and methods of connecting such loudspeakers to the basic equipment and of controlling the output loudness will be described later.

The loudspeaker systems described above are known as "single channel" systems. Other examples are the public address systems (PA) or sound reinforcement systems and wired music distribution systems in which each speaker carries the full frequency range. This latter application dictates similar loudspeaker considerations to those discussed just above. General purpose horn-type loudspeakers are often used for paging and sound reinforcement systems, particularly when in outdoor locations. All of these latter applications are of a professional nature and will not be discussed further explicitly since they are outside the scope of this book.

## MULTIPLE CHANNEL LOUDSPEAKER SYSTEMS

From the discussion up to this point it may be deduced that any given loudspeaker performs best in some certain frequency range. Thus if a combination of loudspeakers could be connected in some way so that each loudspeaker operated in that frequency range best suited to it, and if these ranges were complementary, an improved overall effect might result. Such systems are known as "multiple channel" loudspeaker systems. The frequency range is divided into discrete slightly overlapping ranges each of which is reproduced by a different loudspeaker. This method then permits each loudspeaker or "element" to be designed for best performance in a relatively small range. By such a method it

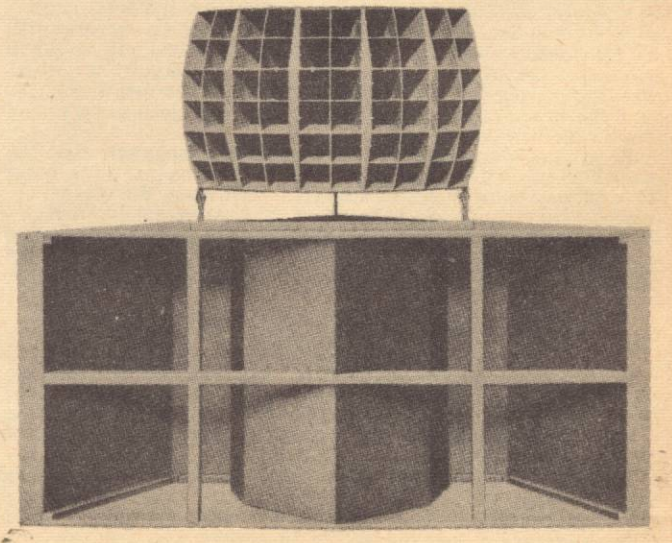

Fig. 3 Multiple Channel Loudspeaker System With Horn Type Low Frequency and High Frequency Channels

is possible to meet many more of the requirements contributing to the high fidelity reproduction which is our goal.

The division of the frequency spectrum into ranges may be accomplished by means of an electrical filter network which feeds the appropriate range or "band" to each loudspeaker. In some cases the loudspeaker element is designed so as to reproduce only the desired frequency range. Also combinations of the above two methods are used. In any case the frequency spectrum division must be done in such a way that no adverse effects occur in the overall result which defeat the very purpose of the combination.

In many professional applications the various channels (usually two) are of the horn-type; the usual motion picture theatre system is an example and is illustrated in Figure 3. In smaller systems a direct-radiator loudspeaker in a suitable cabinet is usually used for the low frequency range; Figure 4 illustrates a typical system of this type. These are professional applications however and will be discussed no further here.

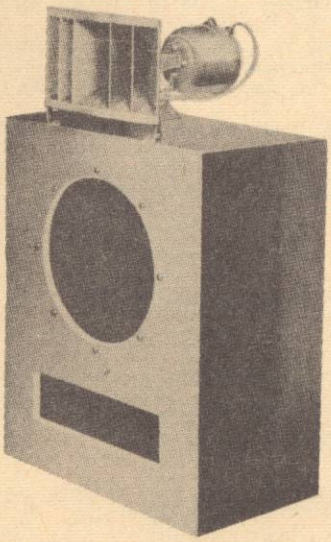

Figure 4. Multiple Channel Loudspeaker System with Enclosure for Low Frequency Channel.

For use in conjunction with home reproducing equipment the "coaxial" type of multiple channel system is ideally suited. In these systems the various loudspeaker elements are placed on a common central axis. Their prime advantage other than those of the multiple system is their compactness; in many cases no greater space is required than for the usual single direct-radiator loudspeakers.

Coaxial loudspeakers may consist of direct-radiator elements for all channels or one or more of the channels may use horn-type elements. The advantages of a direct-radiator element for the high frequency channel is simplicity of the design and the resulting low cost. Its disadvantages lie in the fact that uniform, constant level, undistorted output is difficult to maintain at very high frequencies and the "angular coverage" becomes small at high frequencies.

When using horn-type high frequency elements the angular coverage can be controlled by the horn design. Further advantages are high efficiency and smooth, uniform performance at relatively high frequencies.

## PHYSICAL CHARACTERISTICS OF LOUDSPEAKERS

The performance and physical characteristics of loudspeakers are so complex that little progress has been made in standardizing them. Recent activities in the field of standardization should result in some standards of particular value.

Table I lists certain physical dimensions of interest for direct-radiator loudspeakers. The figures for maximum diameter and mounting hole center radius are generally accepted as standard by the industry.

The magnitude of the electrical impedance of a direct-radiator loudspeaker without baffle varies with frequency

Table I. Physical Dimensions for Direct-Radiator Loudspeakers

| Nominal Size | Maximum O.D. | Mtg. Hole Center R. | Baffle Cutout Diameter |
|---|---|---|---|
| 4 | 5 | 2-11/32 | 3-1/2 |
| 5 | 5 | 2-11/32 | 4 |
| 6 | 6-11/16 | 3-1/16 | 5-1/4 |
| 8 | 8-1/8 | 3-13/16 | 6-3/4 |
| 10 | 10-1/8 | 4-13/16 | 8-3/4 |
| 12 | 12-1/8 | 5-25/32 | 10-1/2 |
| 15 | 15-1/8 | 7-9/32 | 13-1/4 |
| 18 | 18 | 8-17/32 | 15-3/4 |

All dimensions are in inches.
Where slotted mounting holes are provided they include the above mounting hole positions.
Four mounting holes spaced at 90° are provided in all cases.
In larger sizes eight mounting holes may be provided with 45° spacing.

in a manner shown in Figure 5. The low frequency at which the large rise in the magnitude of the impedance occurs is known as the "resonant frequency" or "natural frequency". The "nominal impedance" of a direct-radiator loudspeaker is the value at the lowest point on the curve above the resonant frequency as indicated on Figure 5. The accepted standard impedance for loudspeakers for use in radio receivers is 3.2 ohms. Many loudspeakers have other nominal impedance values for specific reasons. A value of approximately 50 ohms is used commonly in intercommunicating systems; this higher value reduces line losses. Values from 6 to 8 ohms are also common in the larger loudspeaker sizes particularly for sound reinforcement systems. Horn-type loudspeakers normally have a nominal impedance of 16 ohms.

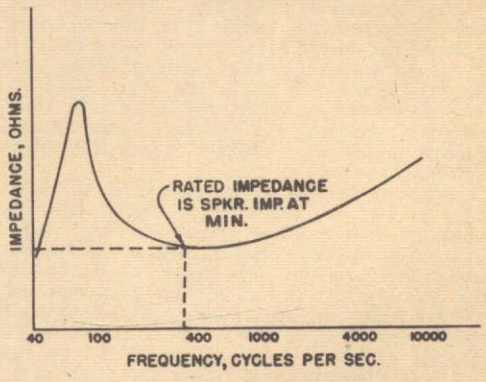


Figure 5. Magnitude of Direct Radiator Loudspeaker Impedance as it Varies with Frequency.

## FACTORS IN ACHIEVING HIGH FIDELITY SYSTEMS

The term "high fidelity" is widely used in describing systems with considerable misunderstanding of its meaning. "High fidelity" can be defined as an exact reproduction of the original sound. But this definition immediately implies several serious restrictions. An exact reproduction of the original sound can only be achieved in the same or a duplicate room or auditorium. Also the sound source must be effectively as large as the original, say orchestra; the directional characteristics of the source must be the same at all frequencies as for the original instruments. Now it is obvious that the directional characteristics of musical instruments are vastly different and this pattern even changes with frequency for any one instrument. Therefore, it becomes obvious that this definition of "high fidelity" is of no value for home reproducing systems.

A second definition has usefulness and can be directly applied. High fidelity reproduction can be defined as reproduction which is judged by the listener to sound most like the original. It is commonly known that the material to be reproduced goes through a long chain of processes, conversions and equipment before being reproduced. It cannot be emphazised too strongly that every link in this chain must approach perfection as we approach high fidelity performance

of the whole system. This is true since in general the shortcomings of any one link are added to those of all other links; the aggregate of a large number of small discrepancies becomes a major deviation.

Many interrelated factors contribute to the achievement of high fidelity. Of primary importance is the absence of noise and distortion in the reproduced signal. The subject of distortion alone could consume many pages; let us merely consider here as distortion any new signal components introduced by the system. This latter definition of distortion would then also include noise; particularly objectionable are low frequency hum, high-gain amplifier hiss, and loudspeaker rattles or buzzes.

The transmission characteristics must be "smooth"; i.e., the acoustic output must not change rapidly or erratically with frequency. Such variations change the overtone structure of certain musical instruments particularly for certain notes and also tend to submerge certain notes of certain instruments. It is also important that the low frequency output be correctly balanced with the output in the middle frequency and high frequency portions. The reproduced sound cannot sound like the original if some portion of the frequency range is quite prominent. The extent of the frequency range must also be balanced at the high and low frequency ends. If a very small loudspeaker is used and thus the low frequency range limited, it is not feasible to extend the high frequency range without limit; even though frequencies are added that are in the original the reproduction is less pleasing and acceptable - the reproduction sounds less like the original.

Good "transient response" refers to the ability of a system to reproduce effectively staccato and explosive type sounds involving extremely rapid rise or decay times. It is obvious that such response is important since musical sounds are predominantly of this nature.

If the above criteria are adequately met, then considerable advantage may result by extending the frequency range both at high and low frequencies until all components of the original sound may be reproduced. Unfortunately, wide frequency range has often been considered as synonymous to high fidelity with disappointing results. Only after the important factors discussed above have been given careful attention is it desirable to extend the frequency range without limit. A moderate band width system meeting all of the other conditions above can be demonstrated to be much more acceptable to a listener than a system reproducing the complete range of frequencies but with distortion and noise present or poor frequency balance or transient response.

All of the above factors apply equally to all parts of the reproducing system from microphone, studio and transmitter or recording medium through to the loudspeaker and listening room. Some further aspects should be given consideration and apply more directly to the loudspeaker. As was described earlier, the sound one hears in a room is comprised of that coming directly from the loudspeaker and that being reflected from the walls one or more times. Now the amount of sound coming directly from the loudspeaker should be nearly the same at all points in the room where one might listen since the ratio of this direct to the diffuse sound should be the same at all such positions. The diffuse sound is here assumed to be reasonably constant throughout the room. Therefore the "angular coverage" or "polar response" of the loudspeaker should be quite broad. This angular coverage must also be essentially constant throughout the frequency range being reproduced.

A stereophonic system is one in which two or more physically separate entire transmission systems are used in such a way as to achieve natural three dimensional effects. This obviously adds a great deal to the realism. Some of these effects can be obtained by using two or more loudspeaker systems separated appreciably but reproducing the same electrical signal. Also, loudspeaker systems of rather large physical size usually sound more natural.

## HIGH FIDELITY LOUDSPEAKERS

As stated previously, single unit direct-radiator loudspeakers are now available which fulfill many of the requirements for high fidelity performance. Reasonable care in the design and production processes insures against noise created in the loudspeaker itself; such noises are usually due to loose joints and wires or due to the diaphragm striking some part of the frame.

Low distortion and good transient response are the result of good basic design; of particular importance are adequate size and clearance of moving parts and well designed suspensions. The diaphragm must have suitably distributed mass and stiffness and suitable reinforcement added so that it does not respond to many modes of vibration.

Loudspeakers of the coaxial type described above are particularly to be recommended where high fidelity signals are available for reproduction; FM direct pick-up signals are usually quite satisfactory. It must be pointed out again that high fidelity speakers, however, will reproduce all signals that are impressed on them including any distortion or noise in the system. These coaxial loudspeakers not only are capable of reproducing the full frequency range that the ear can hear but also give proper overall balance. The models incorporating compression-type high frequency elements are particularly good in this respect.

## LOW FREQUENCY LIMITATIONS OF LOUDSPEAKERS

It is obvious that the acoustic energy radiated must be related to the amount of air in contact with the vibrating radiator and to its amplitude of vibration. Now the amplitude of vibration is limited by the mechanical characteristics of the diaphragm suspensions and therefore for some fixed amplitude the size of the diaphragm is the determining factor.

The use of two loudspeakers doubles the area of the radiator; this is equivalent to a diameter increase of 40%. Therefore, less amplitude of vibration would be required.

Often increased low frequency output is sought by increasing the electrical power (by equalizing the amplifier); this can only result in increased output if greater amplitudes of vibration result. When the suspensions reach a certain displacement they cause distortion and may even fail mechanically. The only satisfactory solution is to actually or effectively increase the size of the radiator.

The above discussion applies only to maximum output in the low frequency region. When reproducing at relatively low levels, the low frequency output can be emphasized by equalizing the amplifier and such practice is recommended. The low frequency efficiency can also be increased somewhat by proper cabinet design. This subject will be treated later.

## SIZE, FREQUENCY, RANGE AND POWER RATING

When choosing a loudspeaker one is often limited by the maximum physical dimensions that can be accommodated. If no such restriction exists, then the choice can usually depend on the low frequency performance desired. The following table can be used as a rough guide to the low frequency limit for various loudspeaker sizes:

| Size | Low Frequency Limit |
|---|---|
| 18" | 40 |
| 15" | 50 |
| 12" | 60 |
| 10" | 70 |
| 8" | 80 |
| 6" | 95 |
| 5" | 115 |

This table assumes an adequate baffle as discussed later. The high frequency range of direct-radiator loudspeakers depends on the dynamics of the radiating structure. It is possible to obtain useful output to approximately 10,000 cycles for all sizes up to and including the twelve inch size; the 15 and 18-inch sizes are limited to about 8500 cycles. No such limitation exists for multiple channel systems.

The audio frequency power available in most amplifiers is more than adequate for most home applications. In some cases the output power available is quite high and provision must be made to protect the loudspeaker if it does not have a sufficiently high rating.

The power rating of a loudspeaker should be the maximum reading of a VU meter for music signals which can be reproduced without distortion or damage to the loudspeaker after prolonged use. Usually distortion is the controlling factor; a power of twice the rated value can usually be reproduced without damage. However, it must be remembered that the maximum power output of an amplifier may exceed its rating by perhaps a factor of two also.

The power rating of a loudspeaker is a limiting sort of thing and it must not be presumed that such a power must be available to use such a loudspeaker. The power rating is related somewhat to the efficiency, i.e. the higher rated

speakers are usually the more efficient. The question often arises - Can a large loudspeaker having desirable characteristics but also high power rating (and usually high efficiency) be connected to a small, low power amplifier? The answer is that the large speaker will give more sound output for the same input power than does the original small speaker because of the added efficiency; therefore the substitution of a larger loudspeaker is always feasible from this viewpoint.

From these considerations it becomes obvious that one can usually improve the average radio receiver to a marked degree by merely changing to a more adequate loudspeaker system. It should also be noted in this connection that for a loudspeaker with higher efficiency less distortion in the amplifier will result for a given acoustic output since less electrical power is required.

## ANGULAR COVERAGE OF LOUDSPEAKERS

It was stated previously that wide angular coverage must be achieved in order to approach high fidelity performance. Now as the frequency increases the wavelength of the sound radiated from a diaphragm decreases proportionately; as the wavelength approaches the diameter of the diaphragm the sound tends to concentrate in a beam along the axis of vibration. This effect increases continuously as the frequency is increased.

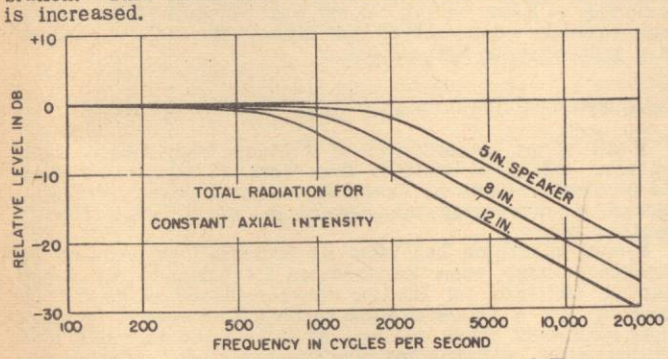


Figure 6. Total Energy Decrease with Increased Frequency for Constant Axial Intensity for Various Piston Sizes.

Figure 6 shows that the total sound energy radiated from a diaphragm decreases as the frequency is increased assuming the sound intensity along the axis as constant. This means then that the angular coverage decreases as the frequency is increased. It can be seen that the angular coverage is improved by using a smaller diaphragm; constant total radiated energy would indicate the same angular coverage at all frequencies.

The above discussion applies more specifically to direct-radiator units; it assumes that all parts of the diaphragm move together, i.e. as a rigid piston. Now as the frequency is increased the diaphragm begins to differ from a simple piston in such a way that the effective size of the piston is decreased, thus tending to improve the angular coverage or polar response. Intuition here suggests that considerable control can be exercised by altering the shape and structural details of the diaphragm. It is by these design factors that good angular coverage is achieved.

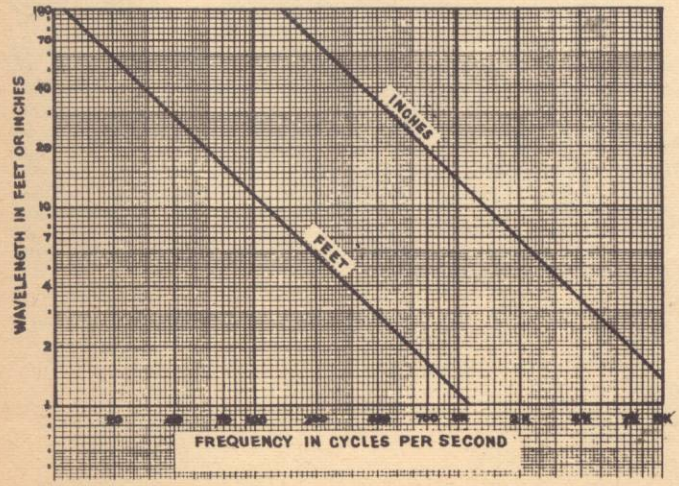


Figure 7. Wavelength of Sound as it Varies with Frequency.

In some loudspeakers deflecting or diffracting devices are placed in front of the diaphragm in an attempt to improve the angular coverage. Such devices must have linear dimensions of at least one-fourth of the wave length of the sound wave to be effective. Figure 7 shows the wavelength of sound in air under normal room conditions for all frequencies of interest.

The angular coverage of horn type loudspeakers is more amenable to control. It can be noted in Figures 3 and 4 that horns made up of a number of sections or cells are commonly used in connection with high frequency channels. The total angular coverage can be assumed as the angle between the axes of the extreme outer cells plus the angle between adjacent cells, i.e. the coverage per cell multiplied by the number of cells. It is apparent that the angular coverage is in general greater in the horizontal plane than in the vertical plane.

In coaxial type loudspeakers this cellular construction becomes more difficult since the dimensions of the low frequency unit restrict the number of cells that can be used and the angle between the outermost cells. These cells are also seen to be a major obstruction in front of the low frequency diaphragm and therefore modify its radiating characteristics.

As described previously the sound wave from a compression type unit expands as the horn flares and effectively is radiated from the mouth of the horn. However as the frequency is increased the sound wave appears to "jump off" or be radiated progressively further back from the throat. In other words the angular coverage is somewhat better at some given high frequency than if radiated from the mouth (as a piston). Again intuition suggests that the rate of flare would be a most important factor. This is correct and horn contours have been developed giving essentially constant angular coverage to very high frequencies.

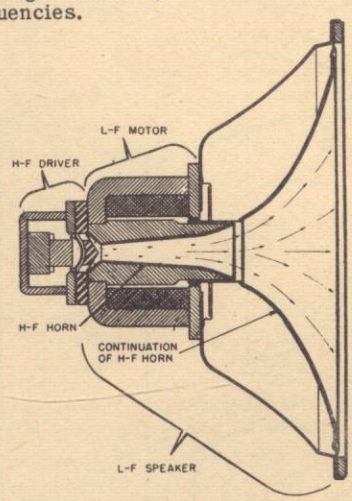


Figure 8. Coaxial Loudspeaker with Special Horn Contour for Horn Type High Frequency Channel.

Figure 8 shows the construction of a coaxial loudspeaker using a horn of the above type. Here the low frequency diaphragm is shaped to act also as part of the horn in the lower portion of the frequency range of the high frequency channel. This method has the marked advantage that there is no obstruction in front of the low frequency diaphragm. No difficulty is encountered due to the vibration of the low frequency diaphragm since it acts as part of the horn only in a region where the wavelength of the high frequency sound wave is several inches and therefore quite large compared to the vibration amplitude. Unusual results are achieved with this advanced design because of the excellent polar response and wide frequency range. Another marked advantage is the fact that the angular coverage is the same in the vertical plane as it is in the horizontal plane just as is the case at lower frequencies.

Another type of coaxial loudspeaker is similar to the above but the results are achieved by using an acoustic lens which spreads a beam of high frequency sound waves over a large angle. The acoustic lens is designed to operate in conjunction with the horn in such a way as to give essentially constant angular coverage in both the vertical and horizontal planes for all frequencies.

## BAFFLES AND ENCLOSURES FOR LOUDSPEAKERS

It can be seen that sound waves will normally be radiated from both sides of a vibrating diaphragm. Now the sound waves radiated from the back of the diaphragm combine with those from the front of the diaphragm and the low frequencies tend to combine so as to mutually cancel. Therefore a direct-radiator loudspeaker must be placed in a baffle or enclosure of some type so that these components cannot cancel in the region of interest.

The simplest baffle consists of a flat rigid surface of hard material with dimensions of the order of a wavelength at the lowest frequency of interest. Such a baffle is large and not suitable for use in a home. Cabinets and enclosures are a refinement in which the baffle is essentially folded back forming a cavity. Such cabinets are often closed at the back so that no sound waves can be radiated from the back side of the diaphragm. Such an enclosure is often called an "infinite baffle" type cabinet. The entire interior surface of such a cabinet should be covered with an absorption material at least one inch in thickness.

Another type of enclosure in common use is the Bass Reflex Cabinet. In this type the cabinet is completely closed like the infinite baffle above except that a second opening on the front, usually below the speaker cutout, permits the radiation of a supplementary sound wave. The amplitude and phase of this secondary wave are related to those from the front of the loudspeaker and depend on the enclosed volume of the cabinet, the piston area of the loudspeaker and the area of the auxiliary opening called the "port". For suitably chosen dimensions these waves are in phase in the low frequency region and thus more acoustic output is obtained because of the larger effective diaphragm size.

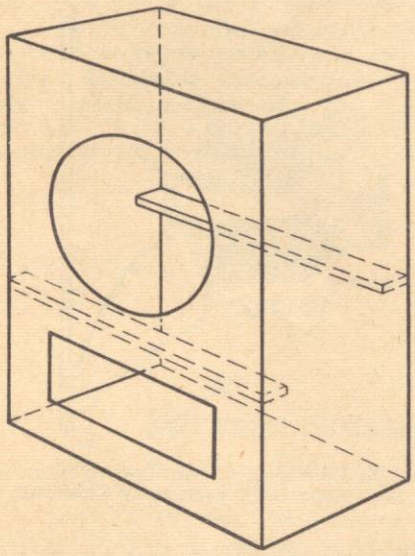

Figure 9. Bass Reflex Cabinet Construction.

Figure 9 shows the construction of a Bass Reflex Cabinet and Table II lists preferred dimensions for various sizes of loudspeakers. Construction should be rigid and well braced; the individual dimensions are of little importance and the shape can be chosen to suit the particular needs. Such a chamber can be easily incorporated into a larger cabinet housing other portions of the system. Approximately one-half of the interior surface of the cabinet should be covered with absorption material such as jute padding approximately one-inch thick.

Table II. Preferred Dimensions for Bass Reflex Cabinets

| Nominal Speaker Size | Cabinet Volume | Port Area |
|---|---|---|
| 18 | 13900 | 96 |
| 15 | 9990 | 71 |
| 12 | 7690 | 66 |
| 10 | 5980 | 41 |
| 8 | 3530 | 28 |
| 6 | 2310 | 21 |

All dimensions in inches, square inches, or cubic inches.

The Bass Reflex principle is best for chamber volumes within 10% of the figures in Table II; for volumes either larger or smaller than this range the infinite baffle type of chamber is recommended. There is also available a line of cabinets including a Bass Reflex cabinet and matching cabinets for supplementary equipment so that almost any custom assembled system can be accommodated.

## PRECAUTIONS IN THE USE OF LOUDSPEAKERS

If all of the potentialities of a modern high fidelity loudspeaker are to be used to their best advantage a number of precautions must be observed. Many of these were mentioned in discussing the general subject of high fidelity systems above.

System distortion can often be decreased by limiting the frequency range; some loudspeakers are equipped with range control facilities for limiting the reproduced range. Such controls are a valuable adjunct since the system includes equipment over which we have no control and in which distortion often arises; such equipment includes radio transmitters and phonograph records.

In addition to range limiting controls mentioned above the use of equalizing controls is highly recommended. Such controls can change the overall balance of high and low frequencies so as to partially correct such factors as bad room acoustics at either the transmitting (or recording) and receiving locations. These controls are also useful in modifying the response to be most pleasing for abnormally soft or extremely loud reproduction; it is generally known that the ear hears differently for these two extremes.

Finally it must be pointed out that the amplifier and loudspeaker load must be correctly coupled to each other. Amplifiers are designed for some nominal load impedance and suitable transformers must be used to achieve this.

Any single loudspeaker of the single or multiple channel type represents a single load impedance value; such a load can be connected to the amplifier directly if a suitable impedance tap is available or a single amplifier to loudspeaker matching transformer can be used. The transformer must have a power rating at least equal to that of the loudspeaker so that distortion does not occur at this point.

If a number of loudspeakers of the same nominal impedance are to be connected to an amplifier a parallel connection is recommended; the resulting load impedance is then the nominal impedance of each speaker divided by the number of speakers to be connected. Here again a transformer must be used to connect this load to the amplifier if a suitable tap is not available. The loudness at any speaker can then be adjusted by means of an L-pad having the same nominal impedance as the loudspeaker. Also any loudspeaker can easily be disconnected by substituting a resistor of the same value of the speaker nominal impedance without disturbing the distribution or impedance match.

# PHONOGRAPH PICKUPS

THIS ARTICLE HAS BEEN PREPARED EXPRESSLY FOR THIS MANUAL

By

## PICKERING and CO. INC.

### GROOVE AND STYLUS

The only function of a phonograph reproducer is to convert the mechanical motion of a stylus sliding in a spiral record groove to electrical signal output, which can then be amplified and applied to a loudspeaker. Although this is a very simple task, many details arise which cause great difficulty in the successful realization of perfect record reproduction. It might well be in order to review the manner in which the recorded information is presented to the pickup, and then explore the requirements of a pickup to make use of this information.

When a record is made, a formed cutting tool is forced into the surface of a relatively soft material in disc form which is being rotated beneath the cutting tool. At the same time the mechanism (or cutting head) which holds the cutting tool is advanced slowly, so that when the disc has made a complete revolution, the tool has moved forward a few thousandths of an inch and the next groove starts alongside the first one. This covers the entire surface of the disc with a single spiral groove which is continuous from beginning to end of the record. On an average twelve inch record this groove is about 800 feet long. On a microgroove record, the groove can be as much as 2000 feet long! The shape of this groove in cross-section is shown in Fig. 1.

If we place a ball-point stylus in this continuous spiral groove, the stylus will be slowly drawn across the disc as the turntable is rotated. If the stylus holder is mounted on a pivoted arm, the arm will swing across the record under the "screw" action of the spiral groove. The stylus may be said to "scan" the entire length of the groove. A portion of the record surface is shown in Fig. 2a. Fig. 2b shows what happens to the groove if the cutting stylus is caused to oscillate back and forth sideways while it is cutting the spiral groove. Now, although the average groove configuration is still a spiral, there are numerous "wiggles" which the playback stylus must follow to remain in the groove. These wiggles represent the modulation or useful output information to be obtained from the record. It is the function of the pickup to convert this modulation of the record grooves into an electrical signal which can then be amplified.

Regardless of the type of electrical generator element used in the pickup, whether it be crystal, ceramic, magnetic or moving coil, all of the mechanical motion originates in the fit of the playback stylus in the record groove. This is purely a problem in geometry, and has nothing to do with the electrical or mechanical properties of the pickup. Fig. 3 shows the tip of the reproducing styli as seen from the side. A section through the tip at the point where it engages the

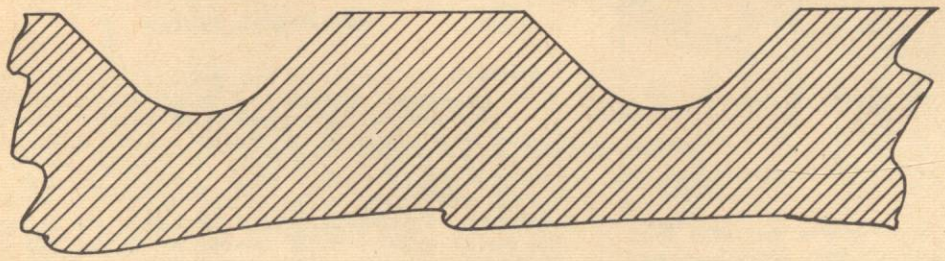


FIG. 1

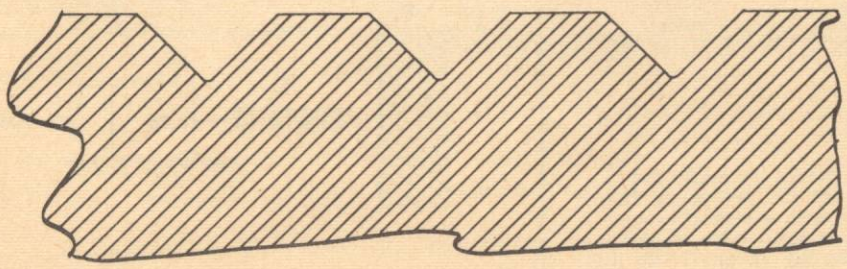


FIG. 1

record groove would show a circle. It is obvious that the smaller the diameter of the tip, the finer is the detail which can be reproduced. However, if the tip is made too small we have the condition shown in Fig. 4a, where the stylus is not firmly held by the groove and serious "rattling" would result. Fig. 4b shows the fit of a stylus which is too large for the groove. (A standard stylus on a microgroove record would give something of this sort.) Fig. 4c shows the ideal condition which results from a perfect fit. The playback stylus should always be the smallest size which will not produce rattling. This condition will give the best frequency response, the lowest surface noise, and the least distortion.

There is one serious flaw in this picture, however, which must be considered. Although record companies nowadays are

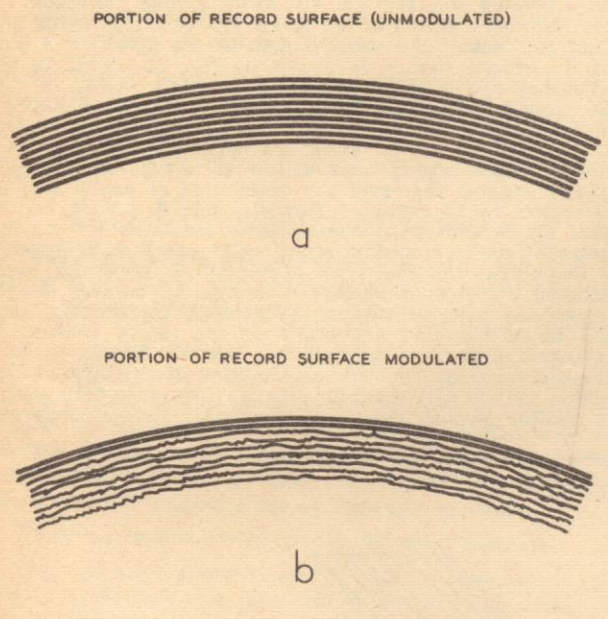


FIG. 2

pretty careful about groove shape, it was not ever thus. Some of the older records, particularly those made from worn stamping dies, have groove bottoms with much larger radii than shown in Fig. 1. In these cases the only thing possible is to use a larger stylus radius, which fits better in the larger groove. The same condition prevails on new records which have been badly worn by playing. A larger stylus radius will often make such records sound better.

Following are the recommended radii for styli for all types of recordings:

Microgroove records (Columbia LP and Victor 45):
.0009 to .0011
New recordings, new pressings:
.0023 to .0025
Sixteen inch transcriptions:
.0020 to .0023
Instantaneous lacquer discs:
.0023 to .0025
Old or worn records:
.0027 to .0031

The material of which the playback stylus is made has a great effect on its useful life. All of the foregoing discussion was based on a playback stylus with a perfect shape, as shown in Fig. 3. When a stylus becomes worn, it looks like Fig. 5. It is readily apparent that the shape shown in Fig. 5C cannot possibly negotiate all of the sharp kinks in the record groove as shown in Fig. 2B. Instead of sliding smoothly around a sharp bend as a perfectly round stylus would, the worn one merely cuts off the sharp corners with the edges which result from wear. Since it cannot follow rapid wiggles of the groove, high frequency response is seriously cut down, and because of the cutting action of the sharp edges, the wear becomes severe at these high frequency passages. A worn stylus will not necessarily affect the record at low frequencies when the radius of curvature is very large. A very slight amount of stylus wear will only affect the very high frequencies, but the region affected will move progressively lower and lower as the stylus wear increases. From this is can be seen that the seriousness of stylus wear depends on the high frequency range of the playback system. High quality systems cannot tolerate the slightest amount of wear, whereas systems which cut off at 2000 or 3000 cycles can use a stylus very much longer.

It must be pointed out that the rate at which a worn stylus wears a record depends only on the amount of stylus wear and not on the material. All stylus materials are so hard compared to the record material that they all do the same amount of damage for a given amount of wear. The life of the stylus, however, varies enormously with material. Following is an approximate evaluation of the various stylus materials used in a light-weight reproducer on standard 12-inch phonograph records:

| Material | No. of plays Low quality system | No. of plays High quality system |
|---|---|---|
| Steel | 1 | 1 |
| Chromium | 10 | 5 |
| Osmium | 200 | 25 |
| Sapphire | 2500 | 200 |
| Diamond | 50,000 (est.) | 3000 |

This points up the superiority of the jewel stylus materials for high-quality reproduction, and for long life in low quality systems. They do have the disadvantage of being somewhat more liable to damage by shock. In this respect the diamond is much superior to the sapphire. For extremely rough use where the pickup is likely to be dropped forcibly many times, metal points should be used and changed often. For normal use, including mechanical record players, the jewel styli will do much better.

## MECHANICAL SYSTEM

Between the stylus and the electrical generator there must be a mechanical linkage to transmit the vibratory motion. It is this mechanical system which usually determines the frequency response of the pickup and the reaction force on the record grooves. Referring to Fig. 4c, it can be seen that the motion of the stylus point is transmitted by the record grooves by means of the groove walls, which are V-shaped. This means that if the part of the pickup holding the stylus resists lateral motion, the stylus will be forced up and out of contact with the groove walls, producing "rattles". To overcome this effect it is necessary to apply a vertical force which holds the stylus down in the groove. This is

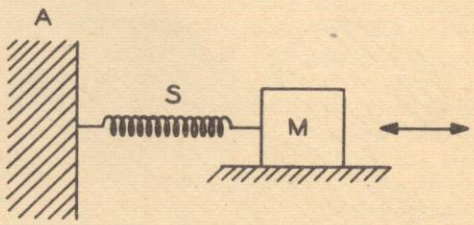


FIG. 6

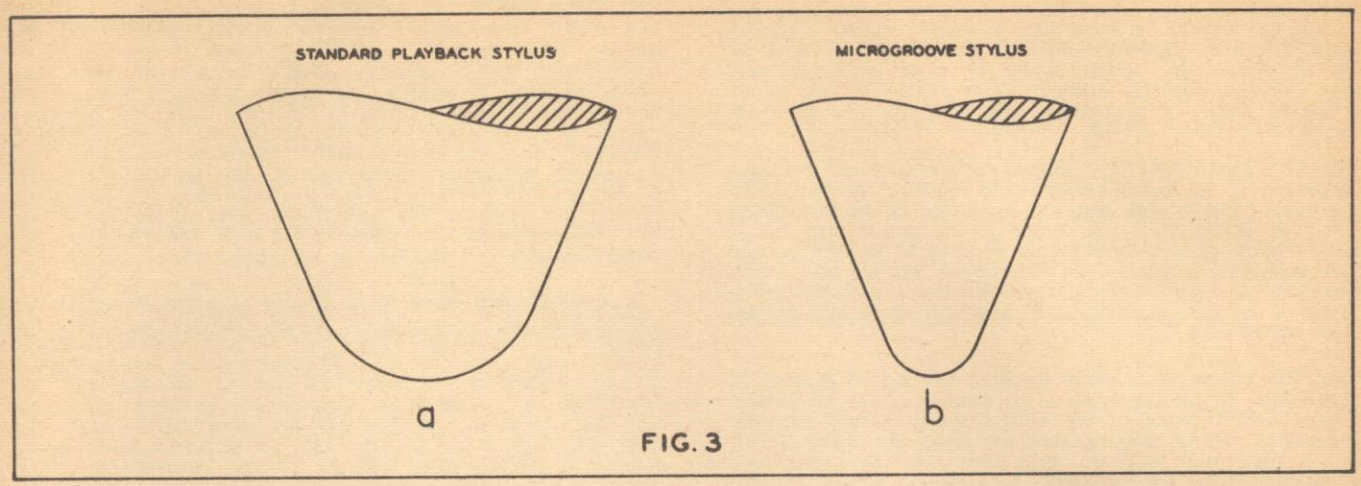


FIG. 3

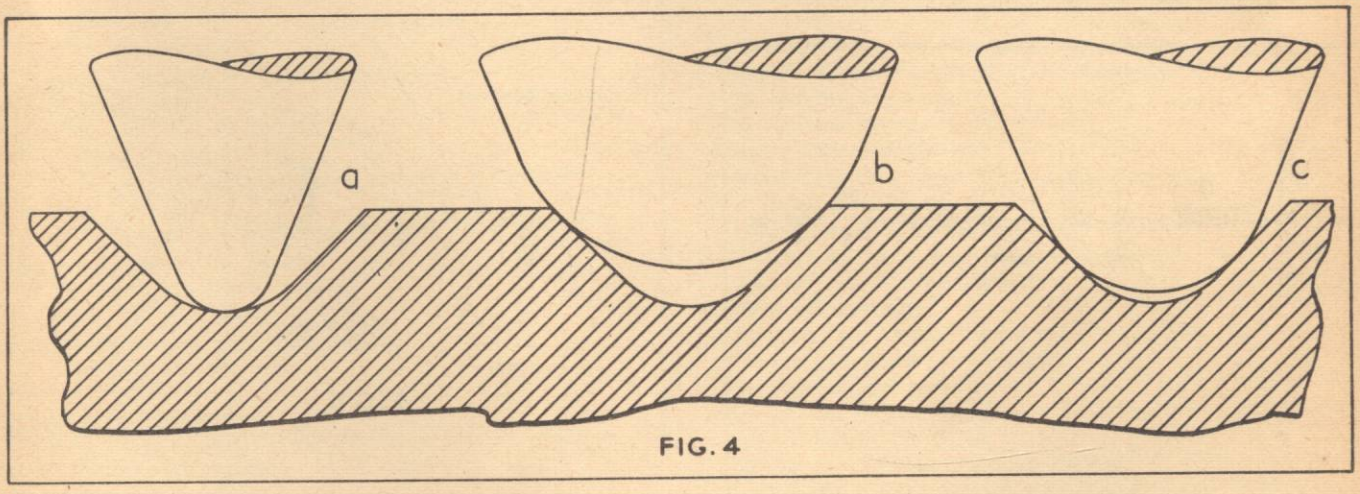


FIG. 4

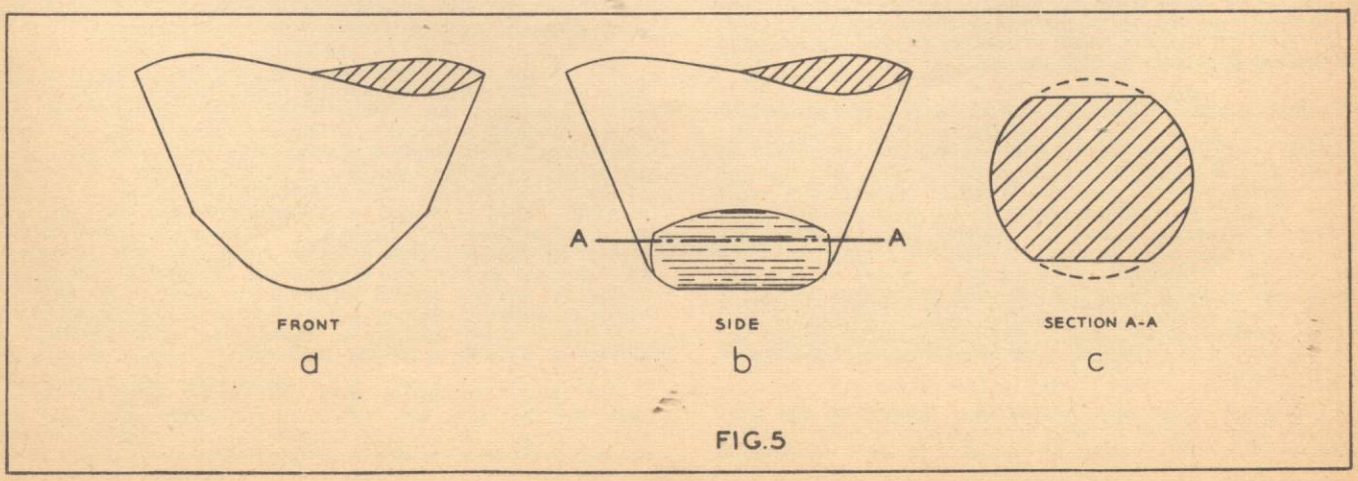


FIG.5

called "tracking force", and is an important factor in record wear. It can easily be seen that, in order to make a pickup operate with low tracking force, all possible effort must be made to cause the stylus holder to move sideways very easily. In this way the tendency of the stylus to ride up on the groove walls is minimized, and less tracking force is required.

Fig. 6 shows a schematic diagram of the mechanical system of a pickup of simplest possible construction. M represents the mass of the stylus and stylus holder, S is the spring holding the stylus centered, and A is the pickup arm, which usually has a mass so great with respect to M that we can ignore it for the present. We will ignore any friction in the the surface on which M is sliding. That was put there only to make it easy to visualize the direction of motion, shown by the arrows.

When the stylus is properly tracking the record groove, it is equivalent to forcing mass M to vibrate at the frequency and amplitude dictated by the record groove at any particular instant. If we imagine that we grasp the mass M and slide it back and forth we will have the same situation. The reaction force on our hand is the force felt by the record grooves. Let us first imagine that S is very stiff and M is fairly massive. If we move M very slowly back and forth (corresponding to low frequencies) we are mainly conscious of the stiffness of the spring S. In other words, at low frequencies the stiffness of the centering spring determines the principal reaction force on the record groove. As we increase the frequency of the motion of mass M, we will approach a point where the spring and mass will resonate and

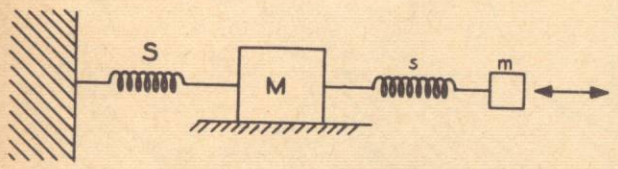


FIG. 7

bounce back and forth with practically no outside force being necessary to maintain motion. At this point the reaction force is practically zero. As we move M faster and faster, we find that the principal effort goes into reversing its motion at the end of each oscillation, or in accelerating the mass. In fact, if we move it rapidly enough, the spring might even be disconnected and we would feel no difference. From this it can be seen that the mass of the stylus and its holder is the determining factor at high frequencies.

To sum up the mechanical system, we find that at low frequencies the stiffness of the centering spring produces the principal reaction force; at high frequencies the mass of the stylus and stylus holder produces the principal reaction force. In other words, a pickup which is too stiff will rattle at low frequencies, and one which is too massive will rattle at high frequencies, unless the tracking force is increased. The force produced on the record walls is a function of the "mechanical impedance" of a pickup. A low mechanical impedance means long record life and low stylus wear. A pickup which requires low tracking force (less than 1 oz.) has low mechanical impedance. One which rattles unless the tracking force is increased to 1 oz. or more has a high mechanical impedance.

All pickups which have replaceable needles of the conventional type, and which have screw chucks or other massive parts to hold the needle, are subject to poor tracking at high frequencies. A considerable improvement in tracking and record wear can be made, at the expense of high frequency response, by installing in such pickups a "bent shank" or "offset" needle. Fig. 7 shows the mechanical effect of such a system. M is the principal mass of the needle chuck and mechanical system, S is the centering spring, m is the mass of the stylus tip, and s is the springiness of the bend in the needle assembly. At some high frequency, determined by s and M, the tip of the needle m will become decoupled from the main mass M, thereby relieving the record of the load of accelerating the large mass M. Of course, this also cuts off the high frequencies at the same point.

If the principal mass M in Fig. 6 is made small enough (comparable to m in Fig. 7) it is possible to obtain flat response to very high frequencies without imposing a destructive load on the record. Because even a few milligrams of extra weight at this point will prevent attainment of the objective, all wide-range high-quality pickups are made with built-in styli. In this way the mass can be kept to a minimum. With a low stylus mass, the stiffness S can be reduced to provide good tracking at low frequencies. It is important to maintain a good balance between mass and stiffness so that the lightest possible tracking force can be used without running into trouble at either low or high frequencies.

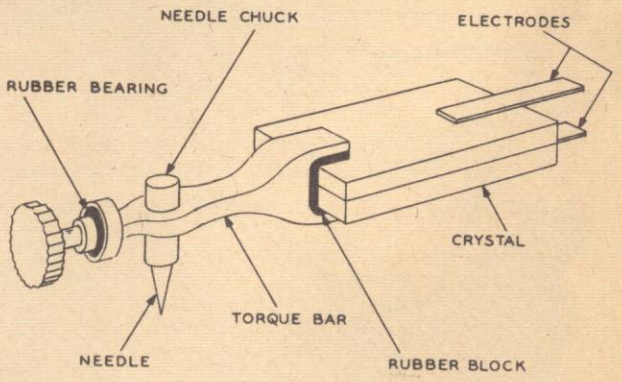


FIG.8

## ELECTRICAL GENERATOR

Since the object of the phonograph pickup is to produce an electric current signal output, there must be incorporated in the device a means for converting the mechanical motion into an electric current. There are many known ways of converting mechanical energy to electrical energy, but only a few of them are very satisfactory in practice, as far as phonograph pickups are concerned.

One of the most commonly used devices is the Rochelle salts crystal, which exhibits a strong piezo-electric effect. This means that the crystal when subjected to mechanical stress develops a potential difference which is approximately proportional to the applied stress. This voltage can be taken off by electrodes and amplified. Fig. 8 shows the construction of the crystal pickup. The generating element is the crystal element. This is a pair of crystals cemented together, and is called a "bimorph" element. The force is applied to the crystal through the torque bar, into which the needle is fastened with a set screw. The rubber block between the forked end of the bar and the crystal transmits the force to the crystal, which is securely clamped between rubber blocks at the rear. The crystal itself does not necessarily move, but develops a voltage as a result of the applied force.

The basic difficulties with the crystal generator arise from the fact that the crystal is inherently stiff, and the stylus cannot be closely coupled to the crystal without making the lateral stiffness of the needle very high. It is

necessary to use some kind of mechanical transformer, which in this case is the torque bar and the rubber blocks, to transmit the force to the crystal. This relatively long transmission system gives rise to a number of reasonances, and it involves coupling a great deal of mass into the stylus, which prevents good tracking at high frequencies. In addition, above the frequency where the mass of the crystal resonates with the rubber blocks, complete cut-off occurs. This can happen at a fairly low frequency, such as 4000 cycles or so.

Various other crystal pickup designs have been made which extend the high frequency response by using smaller parts and better mechanical transformers. They all suffer more or less from troubles arising from the very great mechanical impedance step-down which is necessary from the crystal to the stylus tip. Generally speaking, the wide-range crystal pickup has output voltages in the region of 0.5 volts or less, whereas the usual crystal pickup produces 1.5 volts or more. The high output voltage and low cost are the two principal advantages of the crystal pickup. Among its disadvantages are non-uniform frequency response, susceptibility to damage from high temperature and humidity, and high output impedance. The PN type crystals were developed for greater resistance to temperature and moisture effects, but have lower output and still higher output impedance. So-called "ceramic" pickups are very similar to crystals in operation, and are electrically interchangeable.

To avoid the necessity of having a long transmission link, it is desirable to have a type of electrical generator which is inherently a low impedance mechanical system, which can then be directly coupled to the stylus tip. This avoids all of the losses and incidental resonances which are inherent in a mechanical transformer. The most effective way to achieve the desired results is to cause the stylus to move a magnetic field. This field can be made to induce a voltage in a stationary coil, properly located.

Fig. 9 shows two of the many possible configurations of magnetic pickups. In both cases there is a permanent magnet

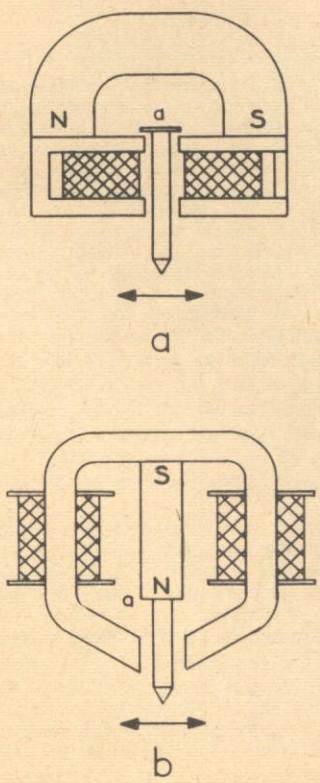


FIG. 9

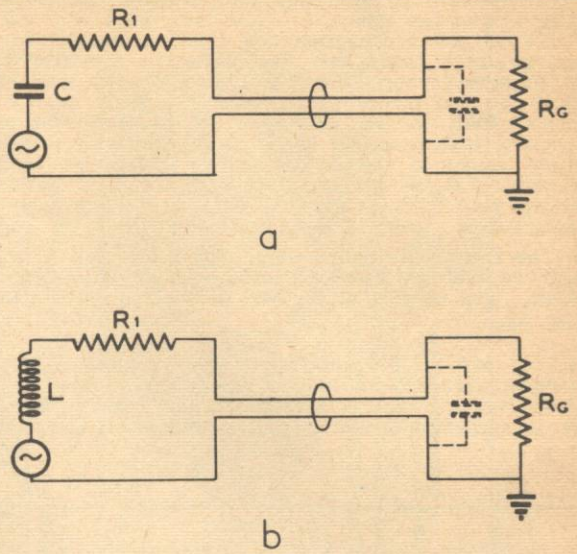


FIG. 10

with its poles marked N and S and an armature pivoted at a. The tip of the armature contains the stylus, which moves in the record groove in the direction shown by the arrows. This motion causes a displacement of the armature which causes the fixed magnetic field to sweep through the coil or coils, shown in cross-section. The rate at which this magnetic flux sweeps the coil determines the voltage induced in the coil. Because the generated voltage depends on the velocity of motion of the armature, a magnetic pickup is a "velocity" device and not a "displacement" device like a crystal pickup. This is an important difference, as will be shown later.

Note that in the moving system of the magnetic pickups shown there is no impedance transforming device needed. The stylus drives the armature directly, and the centering spring can be made optimum for low-frequency tracking while the armature mass can be made very small. The voltage output is low, usually of the order of 0.1 volt or so, but the output impedance is also low - from 10,000 to 100,000 ohms. Magnetic pickups can be made with amazingly good frequency response and low distortion. The record wear with pickups of this type is very low because the mechanical impedance is low, and the pickup can be made free from spurious resonances. The principal disadvantages are the susceptibility to inductive hum pickup and the relatively high initial cost.

## CIRCUITS

Fig. 10 shows the equivalent circuits of crystal and magnetic pickups connected to an amplifier. In both cases $R_1$ is the total effective series resistance of the pickup element and connecting leads. This quantity is usually very small compared with $R_g$, the amplifier grid resistance. The phantom capacitance shown is the sum of the shielded cable capacitance and the amplifier input capacitance. The effect of this capacity on a crystal pickup is to reduce the output voltage at all frequencies. Since the usual crystal pickup represents a capacity of approximately .001 mfd., this amount of capacity in the leads and amplifier input would reduce the output voltage to one-half its original value, or -6 db. This is easily seen, since half the voltage drop appears across the pickup capacitance and the other half across the phantom capacitance. This relationship holds true only if $R_g$ is very high and and $R_1$ very low, as is usually the case. Since the impedances in a crystal pickup circuit are likely to be of the order of 1 to 10 megohms, it is extremely important to shield all leads thoroughly.

The magnetic pickup, Fig. 10b, develops its voltage in series with an inductance, L. This inductance is of the order of 100 to 300 millihenries and must be considered when running pickup leads any great distance, say over 6 feet. The phantom capacity shown will resonate with this internal inductance and produce the effect of a fairly sharp cut-off low pass filter. In fact, this effect can be used to advantage to control high frequency response by purposely introducing various values of shunt capacitance. It will be found that the value of $R_g$ is very important when the shunt capacitance is appreciable. If $R_g$ is too high the pickup output will show a peak before cut-off. If $R_g$ is the correct value, the response will be flat to the point where the inductance L and the shunt capacitance resonate, above which will occur rapid cut-off. The value of $R_g$ is best determined by trial for any given case.

If the use of low-capacity shielded cable and all other reasonable precautions fail to permit the desired high frequency response from a high impedance magnetic pickup, it may be necessary to use a low impedance unit and a line-to-grid transformer at the amplifier. This arrangement will permit the use of 100 feet or more of pickup cable.

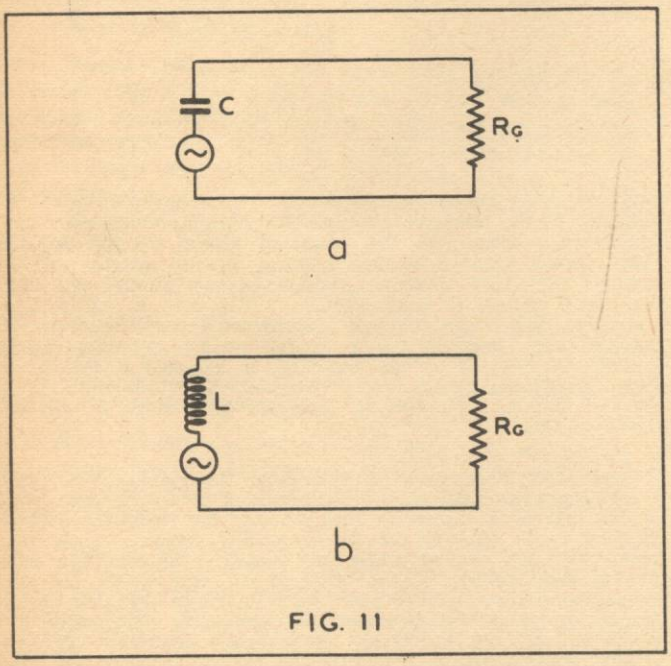

FIG. 11

Fig. 11 shows how the impedance of a pickup is determined, and the effect of $R_g$ on frequency response. In both cases the generated voltage appears in series with a reactance - capacitance in the case of the crystal and inductance in the case of the magnetic pickup. With the crystal pickup, the voltage drop across the capacitance will increase at low frequencies, and unless $R_g$ is large compared to the reactance of C, a large part of the signal voltage will be lost. This indicates that for good low-frequency response a crystal pickup must be fed into a high value of resistance, and the higher the resistance the better the low-frequency response will be. The pickup manufacturer usually will specify the resistance necessary for a given low frequency response.

The magnetic pickup develops its voltage in series with an inductive reactance. This means that the voltage drop across the inductance becomes large at high frequencies unless $R_g$ is large with respect to the inductive reactance. A lower value of $R_g$ will produce a roll-off at high frequencies and a higher value will permit flat response to higher frequencies. The pickup manufacturer will specify the value to be used with a given pickup for flat response to a given frequency.

EQUALIZATION

Phonograph records are made with a magnetic cutting head which vibrates with a lateral velocity which is proportional to the input signal. This means that the amplitude of groove excursion increases linearly as the frequency is lowered. It is obvious that to continue this relationship down to the lowest frequencies desired would impose severe limitations on the permissable amplitude of swing because of the groove spacing. It is common practice therefore to limit the low frequency amplitude by rolling off the low frequencies below some arbitrary frequency (usually 500 cycles) called the turnover frequency.

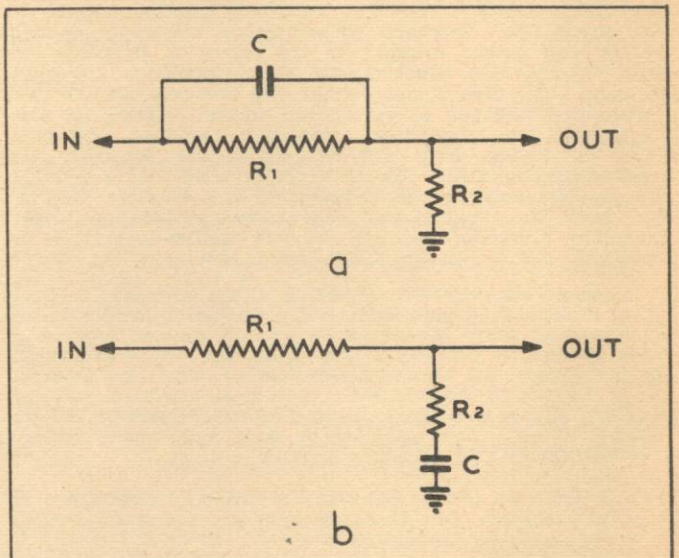

FIG. 12

Because of this reduction in low-frequency velocity it is necessary to build up the low frequency response on playback to compensate for this effect. This is called "equalization". It must be pointed out that equalization is needed for the record characteristic, and not for the pickup. Any compensation which may be added to correct for deficiencies in a given pickup must be treated separately from record equalization.

Since a crystal pickup responds to the amplitude of displacement of the stylus, its output characteristics match the record characteristic from the turnover frequency down. However, the high frequencies will be attenuated at the rate of 6 db per octave starting at the turnover frequency. Fig. 12a shows a simple equalizer for crystal pickups. $R_1$ should be a high enough value to give good low frequency response. $R_2$ should be 0.1 $R_1$ for equalization to 5000 cycles or 0.05 $R_1$ for equalization to 10,000 cycles. C should be chosen so that its reactance equals $R_1$ at about 1000 cycles. There will be a 20 db loss with $R_2 = 0.1R_1$ and a 26 db loss with $R_2 = 0.05R_1$. This must be made up for by additional amplification.

Fig. 12b shows an equalizer for a magnetic pickup. In this case the pickup responds to velocity and reproduces the record characteristic exactly. It is therefore necessary to build up the low frequencies exactly the same amount as they were reduced in recording. $R_1$ should be chosen to give good high frequency response as discussed earlier. $R_2$ should be at most $0.1R_1$ for equalization to 50 cycles, and $0.05R_1$ for equalization to 25 cycles. C should be chosen so that its reactance equals $R_2$ at about 250 cycles. It is important that any shunt resistance across the output of the equalizer be at least 20 times $R_2$ in order to prevent loading the equalizer at low frequencies. If this circuit is used directly after the pickup it will be found that extreme care is necessary to avoid hum, because of the low signal levels involved. It is often more desirable to place the equalizer after the first stage of amplification. In this case, $R_1$ is the value needed for tube load, and the other ratios remain the same.

Meissner

# INSTRUCTIONS
## For The ASSEMBLY and OPERATION Of The MEISSNER 2-CW KIT

*This Kit available from your Local Distributor.*

The Meissner 2-CW Transmitter Kit has been designed for both ease of assembly and simplicity of operation. Properly assembled the 14 watt (input) CW transmitter will afford many hours of operating pleasure.

The Meissner 2-CW was designed primarily for novice license operation on the 3.7-3.75 MC (coil tunes 3.5-4) band. It may also be used on the novice 26.96-27.23 MC band with proper crystal and coil. The Meissner 2-CW will operate on the 7.0-7.3, 14.0-14.4, and 21.0 to 21.45 MC bands, when used with proper crystal and coils as an AC powered transmitter on exciter. The Meissner 2-CW will operate on DC for portable or emergency use. The coil supplied with this kit is for 3.7-3.75 MC operation. Coils for other bands are available through your jobber.

Assembly of the 2-CW is made after you have read all of the instructions carefully, and studied the photographs with the parts layed out so that the entire construction can be mentally pictured. When you are able to picture each part and its place in the schematic diagram you are ready to make a step by step construction, testing as you proceed.

The first step is to mount the large components as given in the detailed instructions with the kit.

The second step is to install the small parts, wiring and testing as you proceed. All leads should be short and direct. When stripping the insulation from leads cut through the insulation about 3/8" back from the cut end being sure to scrape the wire and twist the strands tightly together. This is not necessary on the push back wire supplied as the insulation is made to push back on the tinned wire.

The pictorial diagram shows proper small parts placement. All leads, other than insulated leads, should be kept 1/4" from the chassis. Proceed to wire and test as given in the detailed instructions with the kit.

1. Connect and solder the power transformer primary and the on-off switch.
2. Connect and solder the rectifier filament leads.
3. Wire and solder the H. V. transformer leads.
4. Test the wiring by plugging in the line cord and turning on the set. Measure voltage with an AC voltmeter from the top of the chassis.
5. Connect and wire the 6V6 filament.
6. Test to see if the 6V6 filament lights.
7. Wire the choke.
8. Connect and solder the filter condenser.
9. Mount and solder the bleeder in place.
10. Test this circuit with a D. C. voltmeter.
11. Wire the 6V6 cathode.
12. Wire the parallel fed plate of the 6V6.
13. Connect and solder the R. F. output connection checking continuity as given on the chart.
14. Mount and solder the screen bleeder and the screen by-passes. Check this circuit with an ohmmeter using the chart supplied.
15. Connect and solder the control grid circuit of the 6V6 checking as before.

---

## OPERATION

*AN AMATEUR RADIO LICENSE IS REQUIRED TO OPERATE THIS TRANSMITTER.*

After the wiring has been completed and checked as given the 2-CW may be resonated.

Plug in the tubes, crystal and coil. Connect a D. C. milliameter 0-100 ma, across the metering terminals of the terminal strip. If you do not have a meter a #40 mazda lamp will work.

Connect an eight watt bulb across the output terminals. Plug in the key jack and turn on the power.

Allow a few seconds for the tubes to warm up, and while observing the meter close the key until the meter comes to rest. Note the current reading on the meter or the brilliance of the bulb.

Rotate the variable condenser through its range and notice that the meter current dips or the bulb dims. This point is the resonance point and it is the position where the plate circuit of the oscillator is tuned to the frequency of the crystal. The correct operating point is not at absolute minimum but at a point slightly toward the side of gradual decrease of plate current as shown on the meter or bulb.

Set the variable condenser at the operating point, turn off the switch, and remove the antenna load. You are now ready to connect the antenna. Remember, a licensed operator must operate this transmitter. There are no exceptions.

The 2-CW output circuit is designed to operate into a balanced line of any length. This may be made of 300 ohm twin lead or open wire line. To determine the antenna length for a balanced line using a folded doublet antenna the equation is:

L -- 468/F
L -- Required length of antenna in feet.
F -- The crystal frequency in megacycles.

The 2-CW may be operated into multipliers or other tubes or link coupled to antenna tuners. However, capacity coupling is not recommended if harmonic outputs will result in undesired television interference (TVI).

With little change the 2-CW may be operated on emergency power supplies. Should the antenna load exceed 65 ma. when properly tuned the antenna coupling coil should be spread slightly, moving the bottom turn away from the large coil. Continue uncoupling the coil until the plate current falls below 65 ma.

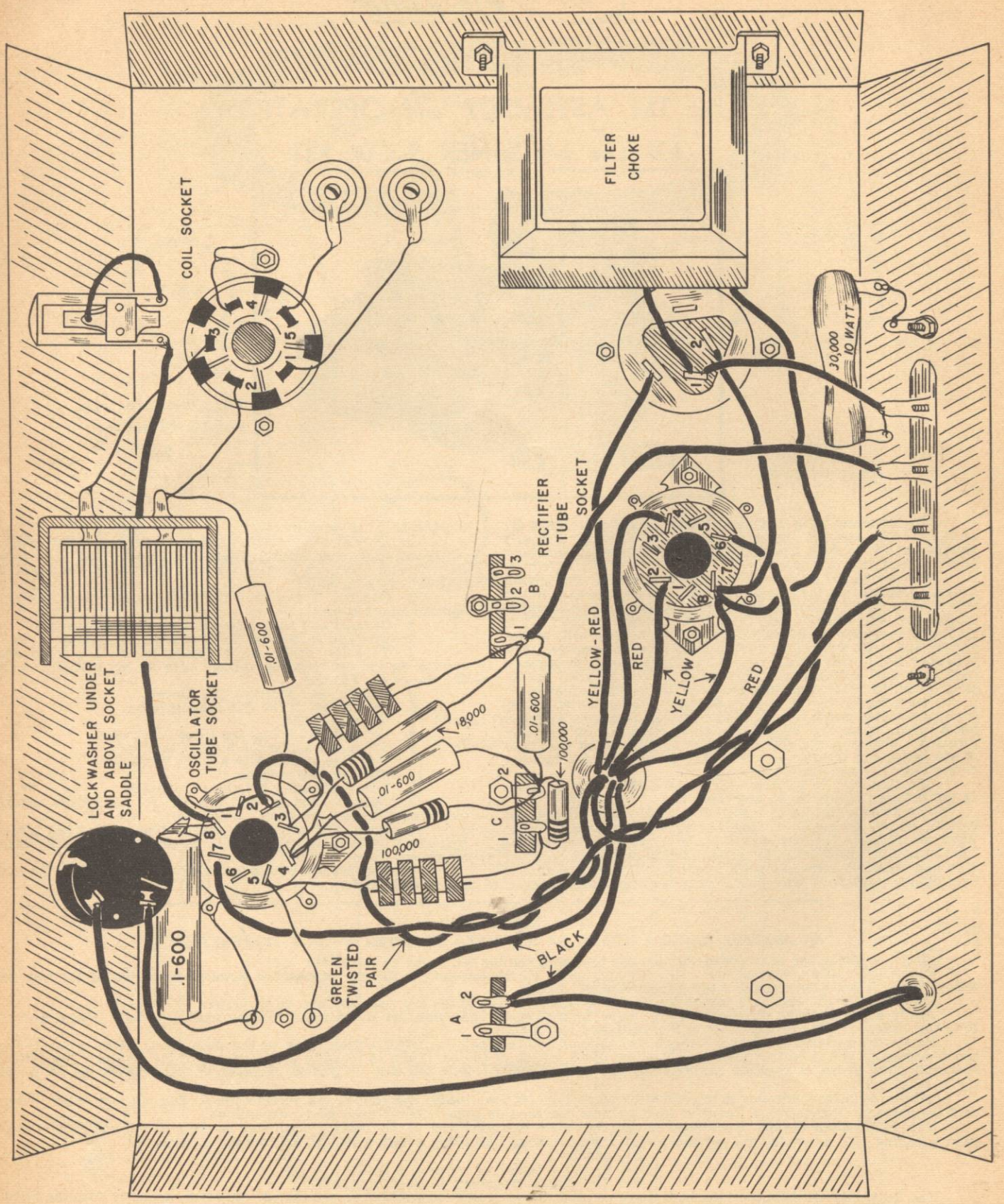
FILTER CHOKE
COIL SOCKET
30,000 10 WATT
RECTIFIER TUBE SOCKET
YELLOW-RED
RED
YELLOW
RED
.01-600
18,000
.01-600
100,000
.01-600
100,000
OSCILLATOR TUBE SOCKET
LOCKWASHER UNDER AND ABOVE SOCKET SADDLE
.1-600
GREEN TWISTED PAIR
BLACK

# MEISSNER 2-CW

## SCHEMATIC DIAGRAM

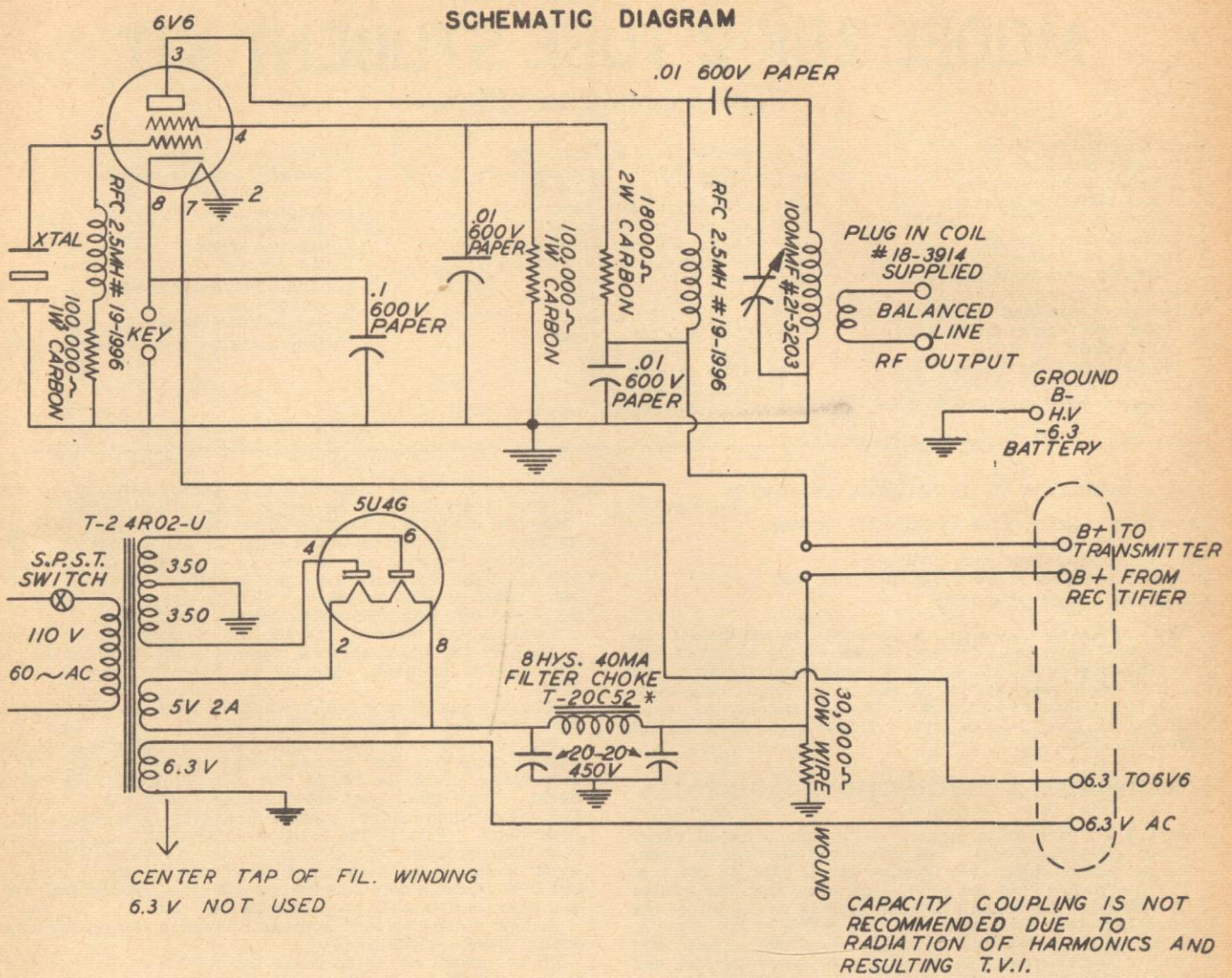


* T-20C53 MAY BE SUPPLIED

## 2-CW KIT PARTS LIST

| DESCRIPTION | PART NO. |
|---|---|
| Chassis | 06401 |
| Transformer | T-24R02U |
| Choke | T-20C52 * |
| Filter Condenser | 16124 |
| Variable Condenser | 21-5203 |
| Socket 8 Prong | 9309 |
| Socket 5 Prong | 29316 |
| Crystal Socket | 29628 |
| Phone Jack | 19470 |
| Switch | 19475 |
| RF Choke | 19-1996 |
| Line Cord | 12434 |
| Terminal Strip | 21723 |
| .01 600V Paper Condenser | 28101 |
| .1 600V Paper Condenser | 34158 |
| 100,000 Ohm 1 Watt Carbon Resistor 20% | RC30AE104M |
| 18,000 Ohm 2 Watt Carbon Resistor 20% | RC40AE183M |
| 2 Ins. Tie Point | 16752 |
| 30K 10W Wire Wound Resistor | R-1637 |
| Knobs | 23-8221 |
| Ceramic Insulator Sets | 27-1000 |
| Hardware Kit | 06411 |
| 10-32 X 3-8 FHB Screws | 18607 |
| 10-32 Nuts | 11352 |
| 10-32 Ext. Lockwashers | 11604 |
| 1 Ins. Tie Point | 06402 |
| 1 Ins. Tie Point | 15787 |
| 1/2" Grommet | 14223 |
| Hardware Kit | 06412 |
| 6-32 X 3/8 RHB Screws | 11212 |
| 6-32 X 1/4 St. Cp. Hex Nut | 11322 |
| #6 Ext. Lockwashers | 16642 |
| Mae West Lug #6 | 11422 |
| Cond. Mounting Plate | 19286 |
| 6-32 X 3/16" BH ST CP Screw | 17668 |
| Hardware Kit | 06413 |
| 4-36 X 5/8 RHB CP Screw | 11204 |
| 4-36 X 3/16 St. CP Nut | 11336 |
| 6-32 X 1-1/8 RHB Screw | 11215 |
| 6-32 X 5/16 Brass Nut | 11303 |
| Lockwasher | 16639 |
| 6-32 Knurled Nut | 11347 |
| 3-8 Hex Nut | 21336 |
| 3/8 Int. Lockwasher | 21619 |
| 3/8 ID X 5/8 OD Flat Washer | 19470-C |
| Plug in Coil | 18-3914 |
| Instruction Sheet | J-516 |

Meissner

# MODEL 2BK 2 TUBE STUDENT KIT

## Parts Supplied for 2BK Kit

Parts Supplied for Kit No. 2BK
1 Punched aluminum chassis
1 Punched aluminum panel
1 2-gang variable condenser
1 Broadcast band coil, 18-3501
2 Miniature tube sockets
1 5-prong coil socket
1 Phone tip connection jack
1 4-terminal connection strip
1 Tie-lug, 2 insulated terminals
1 50,000 ohm regeneration control with switch
1 100,000 ohm fixed resistor, R1
1 220,000 ohm fixed resistor, R2
2 1 megohm fixed resistors R3 & R5
1 680 ohm fixed resistor, R4
1 .1 ufd. 400 volt paper cond. C1
1 .00047 ufd. mica cond. C2
1 .000047 ufd. mica cond. C3
1 4-70 uufd. mica trimmer C4
1 .01 ufd. 400 volt paper cond. C5
1 25 ufd. electrolytic cond. C6
8 # 6-32 X 1/4" screws
4 # 6-32 X 3/8" screws
1 # 6-32 X 5/8" screw
4 # 2-56 X 5/16" screws
10 # 6-32 hexagon nuts
4 # 2-56 hexagon nuts
1 # 6-32 battery nut
4 # 2 Lockwashers
11 # 6 Lockwashers
1 Extruded bakelite washer
1 Micoid washer
1 Brass washer
2 Metal spacers
2 Bakelite knobs
1 Dial pointer
1 Length insulating tubing
2 Ground lugs
1 Regeneration control nut, 3/8"
Each mounting screws and washers

*This Kit available from your Local Distributor.*

### ADDITIONAL MATERIALS REQUIRED

90-volt "B" battery or two 45-volt "B" batteries
4.5-volt "A" battery
Headphones, magnetic type, 2,000 ohms
Pliers with cutters, screw driver, soldering iron
Wire, Solder, tubes (1T4, 3V4)

ANTENNA AND GROUND: A good antenna and ground will provide best reception. Connect to water pipe or to iron rod driven in damp earth for ground. Antenna should be 50 to 100 feet long, well insulated, and 20 feet or more high. For local reception, an insulated wire 20 to 30 feet long may be used indoors with good results, but a ground connection should always be used.

## FOLLOW THESE INSTRUCTIONS CAREFULLY

Unpack kit with great care to avoid loss of small parts. Check all parts against list; report any shortage at once.

Knock out the long oval opening at the rear of chassis.

The connection strip and phone jack mount from the outside of the chassis; the tuning condenser mounts on the top of the chassis; all other parts mount from the inside of the chassis.

Mount tube sockets with # 2-56 screws, coil socket with # 6-32 X 3/8" screws; use lockwashers under each nut and tighten screws firmly. Orient all sockets exactly as shown.

Mount connection strip and phone jack at rear of chassis.

In mounting all parts, use lockwashers under nuts as shown.

Mount regeneration control, securing it with the 3/8" nut.

Mount antenna terminal as follows: Slip a ground lug over the # 6-32 X 5/8" screw; next slip on the extruded bakelite washer and seat the shoulder in the 1/4" chassis hole. From the top of the chassis slip on the flat bakelite washer and screw on a nut. Slip on a brass washer and loosely screw on the knurled nut.

Mount the antenna trimmer and bracket assembly as shown.

Mount the tuning condenser on top of chassis, placing lugs under the mounting screws as shown.

Wire the set exactly as shown in Pictorial Wiring Diagram. Check each wiring operation against the circuit schematic.

Use colored push-back and solid tinned wire as specified, soldering each connection carefully. Be sure iron is hot and well-tinned; heat connection thoroughly as solder is applied.

Connect resistor and condenser leads to the points shown. Place them in exactly the position shown, shortening resistor and condenser leads where necessary. Connect the grounded-foil end of paper condensers as shown.

Use insulating tubing on one lead of the .1 ufd. paper condenser as shown.

Keep all wiring close to the chassis and neatly arranged. Do not permit bare wires to touch other wires or chassis.

Carefully check all wiring against both the pictorial and the circuit schematic, after completion.

Attach dial pointer to large portion of tuning condenser shaft, using pliers to hook in place. The pointer is placed over the condenser shaft with the small hook pointing out.

Attach knobs to control shafts, using their set screws.

Turn tuning knob to the left to close the condenser plates and slip the pointer until it points to 0. Be sure that the pointer does not rub the panel when the tuning knob is turned.

Connect batteries as shown. Be careful to firmly tighten the terminals and make sure that the bare wires do not touch each other or other terminals. NOTE: Be sure that the set is turned off, with regeneration control to the left.

Connect the antenna, ground, and headphones as shown.

Plug in the broadcast coil, fastening the flexible lead to the antenna terminal. Loosen the antenna trimmer adjustment.

The antenna trimmer should be loose when using the broadcast band and long-wave coils.

Put on headphones and turn the set on, turning regeneration control clockwise until the set breaks into oscillation with a soft hiss. Turn the tuning dial slowly until a whistle is heard. Tune this "beat note" to the lowest pitch and turn the regeneration control counter-clockwise until the whistle just stops. This is the most sensitive point of operation.

A little practice will enable you to tune stations rapidly. Weak stations are best tuned in by the method described but loud stations may be tuned in with the regeneration control retarded below the oscillation point.

Reduce volume on loud stations by turning the regeneration control counter-clockwise.

Do not permit set to oscillate any more than is necessary to locate stations, as this allows radiation of a signal which may cause interference in neighborhood receivers.

Coils are available to give all-wave reception as follows:

| | |
|---|---|
| 18-3500 | 170-540 kc |
| 18-3502 | 1.4-4.5 mc |
| 18-3503 | 3.2-8.2 mc |
| 18-3504 | 8 - 18 mc |
| 18-3505 | 15 - 34 mc |

Adjust antenna coupling on the short waves with the antenna trimmer, using a loose adjustment of the screw.

Adjust controls slowly and carefully on the short waves. The small section of the gang condenser together with the 6 to 1 tuning ratio assures tuning ease.

Many of the stations heard on the short waves employ radiotelegraphy (CW). These stations must be tuned in with the set oscillating so as to produce a beat note with the incoming signals. The tuning control is adjusted to make the pitch of the beat note such that the code can be copied.

The set is most sensitive to weak CW stations when it is barely oscillating.

The set may block on strong CW signals so that a beat is not produced. This condition may usually be remedied by advancing the regeneration control.

Superregeneration may be obtained on the two highest frequency ranges by advancing the regeneration control beyond the normal point, as indicated by a loud rushing sound. This is a very sensitive condition for reception of 'phone signals.

A stage of audio frequency amplification may be added to this set to provide loudspeaker operation. No recommended circuits are furnished for this, since suitable circuits are available in a number of radio publications.

## 2 TUBE BATTERY RECEIVER KIT. MODEL 2BK.

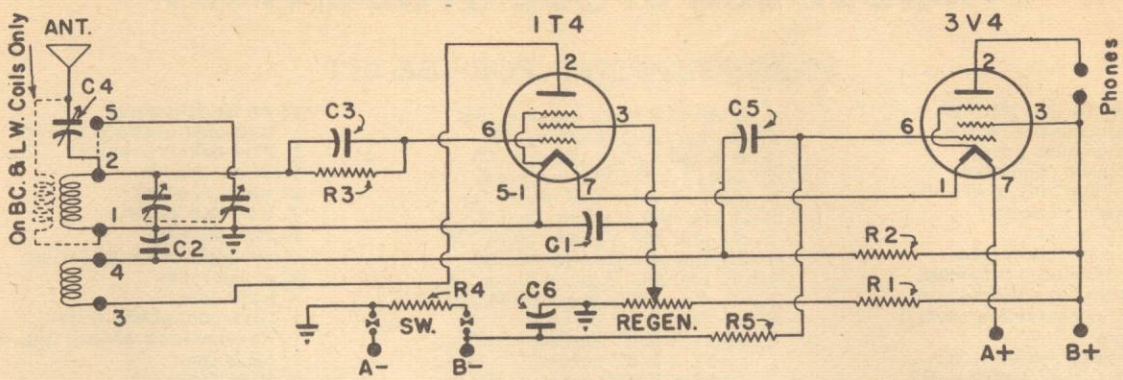


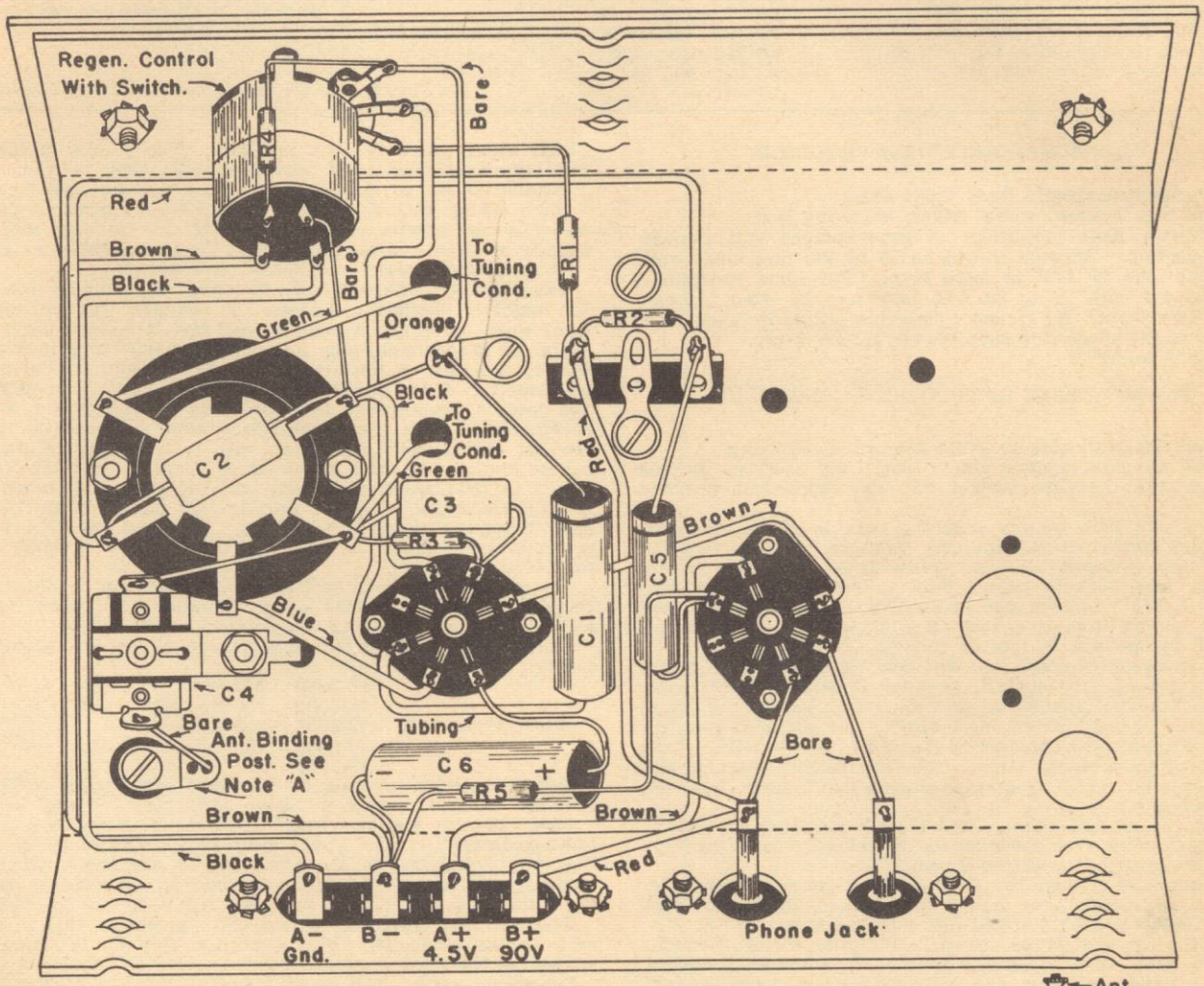


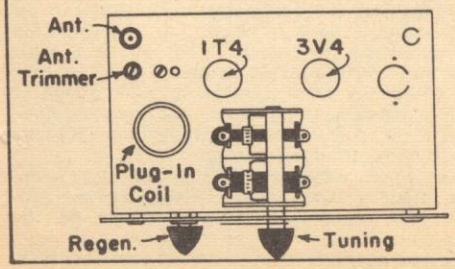


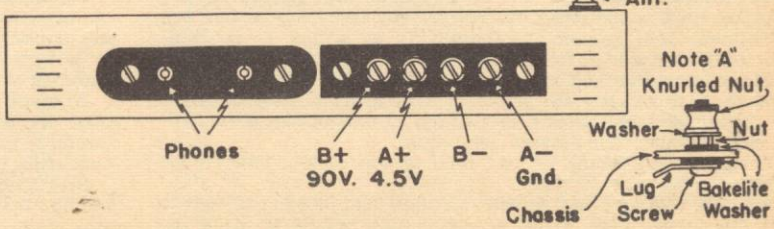

Meissner

# MODEL 3BK 3TUBE STUDENT KIT

## PARTS SUPPLIED FOR 3BK KIT

Parts Supplied for Kit No. 3BK
1 Punched aluminum chassis
1 Punched aluminum panel
1 2-gang variable condenser
1 Broadcast band coil, # 18-3501
3 Miniature tube sockets
1 5-prong coil socket
1 Phone tip connection jack
1 Tie-lug, 2 insulated terminals
1 Tie-lug, 3 insulated terminals
1 50,000 ohm regeneration control with switch
1 1 megohm fixed resistor, R1
1 100,000 ohm fixed resistor, R2
1 220,000 ohm fixed resistor, R3
1 470,000 ohm fixed resistor, R4
1 820 ohm fixed resistor, R5
1 4,700 ohm fixed resistor, R6
1 2,200 ohm fixed resistor, R7
1 68 ohm fixed resistor, R8
1 4-70 uufd. mica trimmer, C1
1 .00047 ufd. mica condenser, C2
1 .000047 ufd. mica condenser C3
2 .1 ufd. 400 V paper cond. C4,5
1 .01 ufd. 400 V paper cond. C6
1 Electrolytic filter cond. C7
1 .05 ufd. 600 V paper cond. C8
1 .05 ufd. 400 V paper cond. C9
8 #6-32 X 1/4" screws
4 #6-32 X 3/8" screws
1 #6-32 X 5/8" screws
6 #2-56 X 5/16" screws
10 #6-32 hexagon nuts
6 #2-56 hexagon nuts
1 #6-32 battery nut
6 #2 Lockwashers
11 #6 Lockwashers
1 Extruded bakelite washer
1 Flat bakelite washer
1 Brass washer
2 Metal spacers
2 Bakelite knobs
1 Dial pointer
1 Length insulating tubing
2 Ground lugs
1 Line cord
1 Line cord strain relief
1 Regeneration control nut, 3/8"
1 6BJ6 tube
2 50B5 tubes
3 Each mounting screws & washers

*This Kit available from your Local Distributor.*

### ADDITIONAL MATERIALS REQUIRED

Headphones, magnetic type, 2,000 ohms
Pliers with cutters, screw driver, soldering iron

ANTENNA AND GROUND: A good antenna will provide best reception. Antenna should be 50 to 100 feet long, well insulated, and 20 feet or more high. For local reception, an insulated wire 20 to 30 feet long may be used indoors with good results. No ground connection should be used with this set as the power line supplies the ground return.

Wire and Solder

### FOLLOW THESE INSTRUCTIONS CAREFULLY

Unpack kit with care to avoid loss of small parts.

Check all parts against list; report any shortage at once.

Knock out the tube socket and line cord half punched holes.

The phone jack mounts from the outside of the chassis; the tuning condenser and line cord strain relief mount from the top of the chassis; all other parts mount from the inside.

Mount tube sockets with # 2-56 screws, coil socket with # 6-32 X 3/8" screws; use lockwashers under each nut and tighten screws firmly. Orient all sockets exactly as shown.

Mount phone jack at rear of chassis.

Use lockwashers under nuts as shown in mounting all parts.

Mount regeneration control, securing it with the 3/8" nut.

Mount antenna terminal as follows; slip a ground lug over the # 6-32 X 5/8" screw, next slip on the extruded bakelite washer and seat the shoulder in the 1/4" chassis hole. From the top of the chassis slip on the flat bakelite washer, and screw on a nut. Slip on a brass washer and loosely screw on the knurled nut.

Mount the antenna trimmer and bracket assembly as shown. Mount the tuning condenser on top of chassis, mounting lugs under the mounting screws as shown.

Run line cord through the 1/2" hole to length required and place strain relief parts around wire, squeezing tightly with pliers. Force strain relief and line cord into hole.

Wire the set exactly as shown in Pictorial Wiring Diagram.

Check each wiring operating against the circuit schematic.

Use colored push-back and solid tinned wire as specified, soldering each connection carefully. Be sure iron is hot and well-tinned; heat connection thoroughly as solder is applied, using only the solder furnished.

Connect resistor and condenser leads to the points shown. Place them in exactly the position shown, shortening resistor and condenser leads where necessary. Connect the grounded-foil end of paper condensers as shown.

Use insulating tubing on one lead of the .1 ufd. paper condenser as shown.

Keep all wiring close to the chassis and neatly arranged.

Do not permit bare wires to touch other wires or chassis.

Carefully check all wiring against both the pictorial and the circuit schematic, after completion.

Attach dial pointer to large portion of tuning condenser shaft, using pliers to hook in place. The pointer is placed over the condenser shaft with the small hook pointing out.

Attach knobs to control shafts, using their set screws.

Turn tuning knob to the left to close the condenser plates and slip the pointer until it points to 0. Be sure that the pointer does not rub the panel when the tuning knob is turned.

Connect the antenna and headphones as shown.

Plug in the broadcast coil, fastening the flexible lead to the antenna terminal. Loosen the antenna trimmer adjustment when using the broadcast band and long-wave coils.

Put on headphones, plug line cord into 105-120 volt AC/DC outlet, and turn on the set. Allow 30 seconds for the tubes to warm up. If the power supply is DC and the receiver does not operate, reverse the line cord plug in the power outlet receptacle. Turn the regeneration control clockwise until the set breaks into oscillation with a soft hiss. Turn the tuning dial slowly until a whistle is heard. Tune this "beat note" to the lowest pitch and turn the regeneration control counter-clockwise until the whistle just stops. This is the most sensitive point of operation. Pull out the line plug, reverse, and replace to determine the position of least hum for AC line.

Do not permit set to oscillate any more than is necessary to locate stations, as this allows radiation of a signal which may cause interference in neighborhood receivers.

Coils are available to give reception on the following bands:

| | |
|---|---|
| 18-3500 | 170-540 kc |
| 18-3502 | 1.4-4.5 mc |
| 18-3503 | 3.2-8.2 mc |
| 18-3504 | 8 - 18 mc |
| 18-3505 | 15 - 34 mc |

Adjust antenna coupling on the short wave bands with the antenna trimmer, using a loose adjustment of the screw.

Many of the stations heard on the short waves employ radio-telegraphy (CW). These stations must be tuned in with the set oscillating so as to produce a beat note with the incoming signals. The tuning control is adjusted to make the pitch of the beat note such that the code can be copied.

The set may block on strong CW signals so that a beat note is not produced. This condition may be remedied by advancing the regeneration control.

Superregeneration may be obtained on the two highest frequency ranges by advancing the regeneration control beyond the normal point, as indicated by a loud rushing sound. This is a very sensitive condition for reception of 'phone signals such as in the 14 mc and 28 mc amateur bands.

A stage of audio frequency amplification may be added to this set to provide loudspeaker operation. No recommended circuits are furnished for this, since suitable circuits are available in a number of radio publications.

CAUTION: Do not touch any part of the under-chassis wiring when the line plug is connected. Always remove the plug from the power line receptacle before working on the set.

Never use the receiver on or near a grounded metal bench, radiator, sink, or other grounded metal objects.

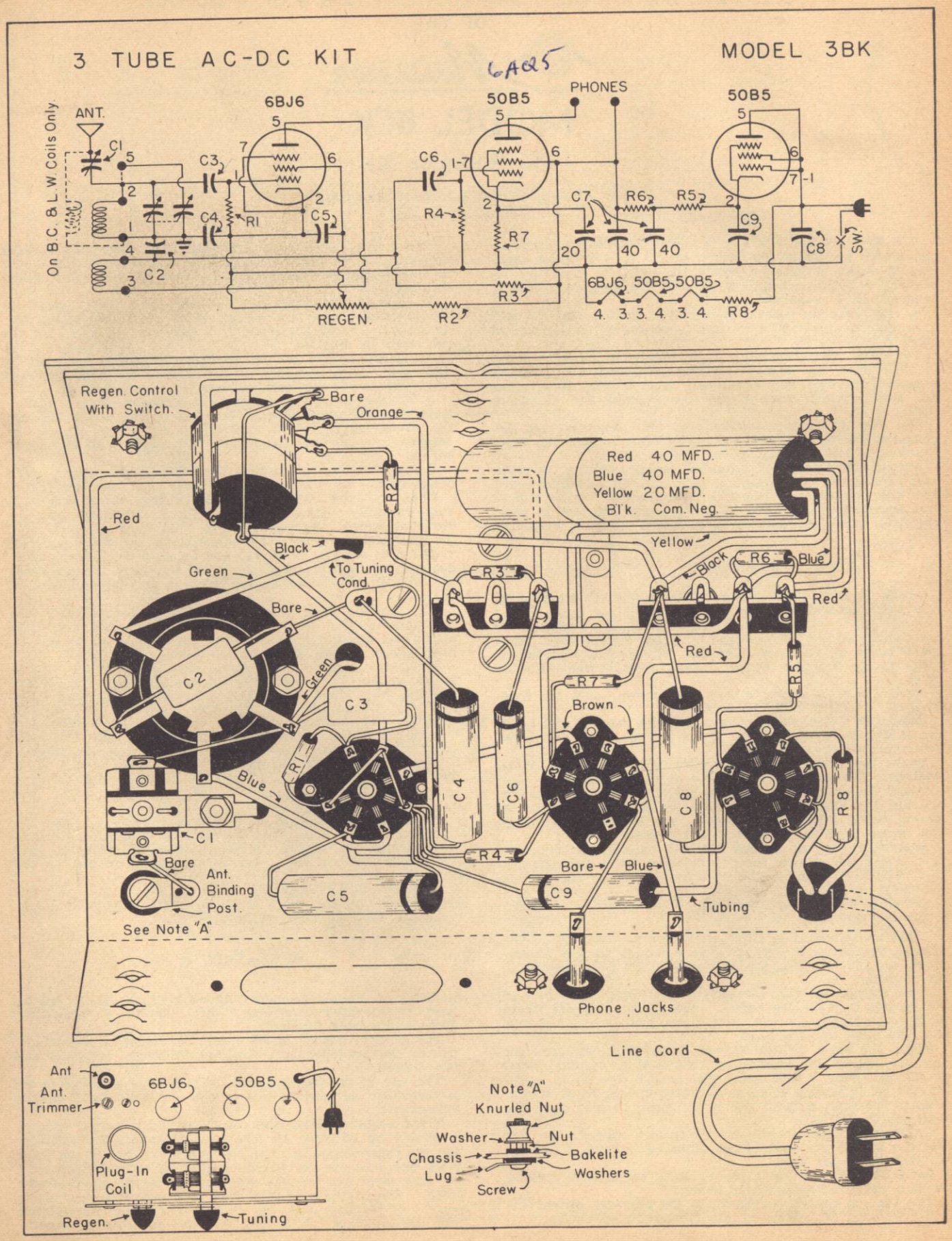
3 TUBE AC-DC KIT
MODEL 3BK
6AQ5
ANT.
On B.C. & L.W. Coils Only
C1
C2
C3
C4
C5
R1
6BJ6
REGEN.
R2
50B5
PHONES
C6
R4
R7
R3
C7
R6
R5
C9
C8
SW.
6BJ6, 50B5, 50B5
R8
Regen. Control With Switch.
Bare
Orange
Red 40 MFD.
Blue 40 MFD.
Yellow 20 MFD.
Bl'k. Com. Neg.
Red
Black
Green
To Tuning Cond.
Yellow
Blue
Red
Brown
Blue
Bare
Ant. Binding Post.
See Note "A"
Tubing
Phone Jacks
Line Cord
Ant
Ant. Trimmer
Plug-In Coil
Regen.
Tuning
Note "A"
Knurled Nut
Washer
Nut
Chassis
Bakelite
Lug
Washers
Screw

## COMPLETE INSTRUCTIONS FOR CONSTRUCTION AND OPERATION OF THE

Meissner

# MODEL 8CK

## FM Receptor Kit

*This Kit available from your Local Distributor.*

### GENERAL

The Meissner Model 8CK is designed to provide superior reception in the 88 to 108 mc FM band. It is a direct application of the circuits of the famous Meissner Model 8C receptor. A double converter system is employed which greatly reduces image responses.

A ratio detector system is employed in this tuner to provide distortionless and noise-free reception with a minimum of tubes and parts.

The RF section, consisting of the oscillator and two mixers, together with the 3-gang variable condenser is furnished completely assembled, wired, and aligned, thus eliminating the most difficult part of the construction and alignment work.

The two IF transformers and the ratio detector coil furnished are factory aligned to work perfectly in your kit, when constructed and wired according to instructions.

Almost any phonograph amplifier, power amplifier, or radio with phonograph input terminals may be used with this tuner. The audio output of the tuner is approximately 7 volts R.M.S.

A well-filtered full-wave AC power supply is used to provide long tube life, cool operation, and to minimize frequency drift.

### ASSEMBLY

Check all parts against the parts list as the kit is unpacked. Any shortages should be reported at once.

Mount the 4 miniature tube sockets from the underside of the chassis with # 2-56 screws, nuts, and lockwashers. Note the position of the socket pins and orient exactly as shown. Refer to the Pictorial Wiring Diagram for this and all other steps.

Mount the octal socket with # 5-40 screws, nuts, and lockwashers, orienting it exactly as shown.

Mount the dial assembly (the panel with two pulleys) using two # 6 self-tapping screws driven into the extruded holes near the front of the chassis.

Mount the power transformer with # 6-32 nuts and lockwashers. Do not remove the nuts on the transformer.

Mount the antenna terminal strip from the rear of the chassis and the 3-insulated tie lug and ground lug nearby exactly as shown, using # 5-40 screws, nuts, and lockwashers. Note that ground lugs do not require lockwashers.

Mount the slender, tubular fastener by pushing it in the hole at the left side of the chassis from under the chassis. Next carefully push in the bakelite condenser and tie-lug assembly, avoiding any sideways pressure.

Mount the volume control-switch as shown, using the 3/8" lockwasher and nut.

Mount the electrolytic filter condenser from the top of the chassis by pushing the mounting ears through the 3 slots provided and then twisting the ears with pliers from underneath the chassis.

Feed enough line cord through the 1/2" hole at the rear of the chassis to reach the switch. Squeeze the bakelite strain relief parts around the cord with pliers just outside the hole and then force into the hole.

Mount the input IF transformer (05452-AL1) at the right and the driver IF transformer (05452-AL2) at the center as shown, using # 6-32 nuts with ground lugs under them. Be sure the indicating holes in the bases are placed as shown.

Mount the ratio detector coil in the same manner, with the 3-lug end to the left.

CAUTION: These three coils are factory aligned. Do not rest the set on the ends of the adjusting screws or jar the adjustments in any way.

Mount the RF section in place, using the special locking washers and other hardware as shown.

Wire the set exactly as shown in the pictorial wiring diagram, checking each step against the circuit schematic.

Use a hot, well-tinned soldering iron, thoroughly heating the joint before applying the solder and allowing the solder to flow freely over the joint. Use only the rosin-core solder furnished.

It is highly important that all parts be placed exactly in the position shown and that all wires and leads be run just as shown. Where the leads of a part are too long, shorten the leads as required.

All wiring in the IF and detector circuits to the coils is done with 22 solid tinned wire, except for the blue insulated wire from the RF section to the input IF transformer.

It is most convenient to wire the filament circuits first. Next wire the power supply, followed by the wiring between the power supply and the rest of the set. Then the IF and detector circuits can be wired, followed by all remaining wiring.

Do not use too much heat in soldering the output cable connections, as excessive heat will melt the insulation.

When you have completed all the wiring, check your work very carefully against both the circuit schematic and the pictorial wiring diagram. Try to make your set look like the pictorial. Be sure all connections are well soldered.

Check to see that no wires short together or to the chassis. See that the ceramic condensers and Capristors do not touch anything else. The coating on these is no guarantee against shorts.

Slip the dial drum over the variable condenser shaft with the bushing side to the condenser. Mesh the condenser plates and turn the drum so that the opening is at the bottom. Now tighten the set screw on the bushing.

String the dial cord as shown, first slipping the 1 inch length of plastic tubing over the tuning shaft. Note that the dial cord wraps around the tuning shaft two times, goes half way around the drum from the top pulley to the drum opening, and completely around the drum in a clockwise direction from the opening to the tuning shaft. Slip the small piece of tubing on the dial cord to the left between the pulleys. Slip the pointer over the cord and tubing and loosely pinch the ears in place. Now stretch the spring so that the cord is snugly in place and hook it in one of the holes or the hook on the drum.

Place the dial scale in position on the panel and snap the spring clips in place. With the condenser plates still fully meshed, slip the pointer so that it coincides with left hand dial scale line and then securely clamp the pointer on the cord.

Plug the tubes in their respective sockets, insert the pilot bulb, clamp the pilot bulb in place on its bracket, and slip the knobs over the ends of the shafts.

### OPERATION

The tuner should be used with an amplifier which will deliver its full rated power output with from 6 to 8 volts R.M.S. audio at its input terminals.

The superior quality of FM reception cannot be appreciated unless the amplifier has excellent frequency response with low distortion.

The use of the tuner with an AC/DC type amplifier is not recommended because of the serious hum difficulties usually encountered.

If the amplifier used with the tuner has a volume control, it should be adjusted as follows: With both the amplifier and the tuner turned on, turn the volume control of the tuner down and advance the volume control of the amplifier until the hum level can be detected, but not to the objectionable point. Now, with a station tuned in, advance the volume control of the tuner and see if full volume can be obtained from the amplifier. If it can, then the amplifier is properly

adjusted and volume can be regulated at the tuner.

The tuner should be located close enough to the amplifier so that the output cable will reach. Various types of plugs can be attached to the end of the output cable to match the type of socket at the amplifier, always wiring the shield of the cable to the frame of the plug.

Observe that the tuner shows three points of reception. This is normal for the ratio detector system; however, only the center one is the correct point of tuning. The tuner should always be tuned to the center point of reception and to the point of least noise.

## ANTENNA

This tuner is designed to use a 300 ohm antenna, such as a folded dipole. It will work satisfactorily with ordinary dipoles, turnstile antennas, and other types of antennas which are not 300 ohms, provided that the transmission line is not too long.

For local reception where indoor antennas are satisfactory an omnidirectional antenna may be made out of 300 ohm transmission line.

Where indoor antennas are unsatisfactory because of steel construction in the building, large metallic obstructions, or for other reasons, an outdoor antenna may be required. Any of a number of excellent antennas on the market may be purchased.

A dipole or folded dipole antenna is somewhat directional along a line at a right angle to the line of the antenna. This should be remembered when installing an outdoor antenna to provide reception from some particular station.

## ALIGNMENT

If the tuner has been constructed and wired carefully in accordance with these instructions, no alignment will normally be required. The factory aligned RF section and the aligned IF coils should be perfectly tuned when the receptor is wired just as shown in the pictorial.

Ordinarily, attempts to align an FM receiver without adequate test equipment result in greater misalignment. For this reason it is strongly recommended that the slugs and trimmers be left alone.

If it is desired to change the calibration of the dial slightly, this may be done by tuning in a station in the range 105 to 108 mc, whose frequency is accurately known. If the dial differs greatly from the station's rated frequency, and if the pointer has been attached properly, the calibration can be shifted by very carefully adjusting the front ceramic trimmer on the gang condenser, turning the dial to the desired frequency and tuning the station in with the trimmer. NOTE: Do not move this trimmer more than a very small amount, as tuning is very sharp.

If it is desired to check the alignment of the IF system, a high impedance voltmeter, 5,000 ohms per volt or more, should be placed across the electrolytic condenser in the ratio detector circuit, observing polarities. Tune in a strong station to obtain a maximum meter reading. Observe the position of the screw driver slots in the ends of the slug adjustments of the two IF transformers. Very carefully adjust them, one at a time, to obtain a maximum meter reading, keeping the station exactly tuned in at all times, CAUTION: Do not rotate any slug adjustment more than 180 degrees from its original setting.

The bottom slug of the ratio detector coil may be adjusted in this same manner. At this time the rear trimmer on the gang may be peaked in the same manner.

To adjust the top slug of the ratio detector coil, connect the negative lead of the voltmeter to the junction of the 220 ohm resistor and the Capristor with the 22K resistor at the tie lug near the left of the chassis. Connect the positive meter lead to the chassis. With the tuning of the set undisturbed from the previous alignment step, adjust the top slug until the meter reads zero volts, not a minimum reading.

Adjustment of the middle trimmer on the gang condenser is not recommended because of the pulling that exists between this and the oscillator adjustment.

VOLTAGE CHART

Taken with 20,000 ohms per volt meter

| Terminal Number | 1 | 2 | 3 | 4 | 5 | 6 | 7 | 8 |
|---|---|---|---|---|---|---|---|---|
| 6AG5 1st Conv. | 0 | 2.5 | 6.3AC | 0 | 100 | 100 | 2.5 | |
| 6AG5 2nd Conv. | 0 | 1.7 | 6.3AC | 0 | 110 | 110 | 1.7 | |
| 6C4 Oscillator | 98 | — | 6.3AC | 0 | 98 | — | 0 | |
| 6BA6 1st IF Amp. | 0 | 0 | 6.3AC | 0 | 77 | 77 | 0.7 | |
| 6BA6 2nd IF Amp. | 0 | 1.0 | 6.3AC | 0 | 80 | 80 | 1.0 | |
| 6AL5 Detector | 0 | 0 | 4.7AC | 0 | 0 | 0 | 0 | |
| 6X5GT Rectifier | 0 | 0 | 185AC | — | 185AC | 114 | 6.3AC | 187 |
| 6C4 Audio | 55 | 0 | 6.3AC | 0 | 55 | 0 | 2.0 | |

## COMPLETE PARTS LIST

ESSENTIAL KIT
1 Tuning unit, prewired and aligned, 13-7627
1 Input IF transformer, aligned, 05452-AL1
1 Driver IF transformer, aligned, 05452-AL2
1 Ratio detector coil, aligned, 05453-AL

COMPLETE KIT
All parts listed above plus the following:
1 Punched aluminum chassis, 05965-A
1 Octal tube socket, 25-8209
4 Miniature tube sockets, 29477
1 2-terminal strip, 16731
1 3-insulated tie lug, 25-6715
1 Power transformer, 29501
7 Lugs, 11422
5 Special locking washers, 26658
1 Condenser-tie lug assembly, 05449
1 Fastener, 21347
1 Volume control with switch, 29424
1" Length plastic tubing
1 Dial drum assembly, 05466
1 Dial cord assembly, 05467
1 Dial assembly, 05939
1 20-20-20 ufd. electrolytic condenser, 34102
1 25 ufd., 25 volt electrolytic condenser 28105
1 .05 ufd., 600 volt metal clad condenser, 28172
1 .05 ufd. 600 volt paper condenser, 28115
1 4 ufd., 25 volt electrolytic condenser, 34147
3 .01 ufd. ceramic condenser, 34111
1 1,000 ohm-.01 ufd. type JCR-C Capristor, 34151-1
2 68 ohm-.01 ufd. type JCR-P Capristor, 34150-1
1 22,000 ohm-.002 ufd. type JCR-C Capristor, 34151-4
1 6 ohm 2 watt resistor, 34130
1 10,000 ohm 1/2 watt resistor, RC20AE103M
2 2,700 ohm 1 watt resistor, RC30AE272K
1 220 ohm 1/2 watt resistor, RC20AE221M
1 1,000 ohm 1/2 watt resistor, RC20AE102M
1 27,000 ohm 1/2 watt resistor, RC20AE273M
1 2,000 ohm 5 watt wirewound resistor, 34149
1 Cable clamp, 16421
1 Line cord strain relief, 29414
1 Line cord, 12434
65 Inches Shielded single conductor cable, 22850
1 Dial light socket, 29221
1 Length Insulating sleeving
1 Pointer, 29425
1 Dial scale, 05771
2 Dial scale springs, 05938
1 Each type 6X5GT, and 6AL5 Tubes
2 Each type 6AG5, 6BA6, and 6C4 Tubes
1 Dial light, 29262
2 Knobs, 29270
2 Knob felt washers, 19595
2 18000 ohm ½ Watt resistors RC20AE 183K
Supply of screws, nuts, lockwashers and other hardware

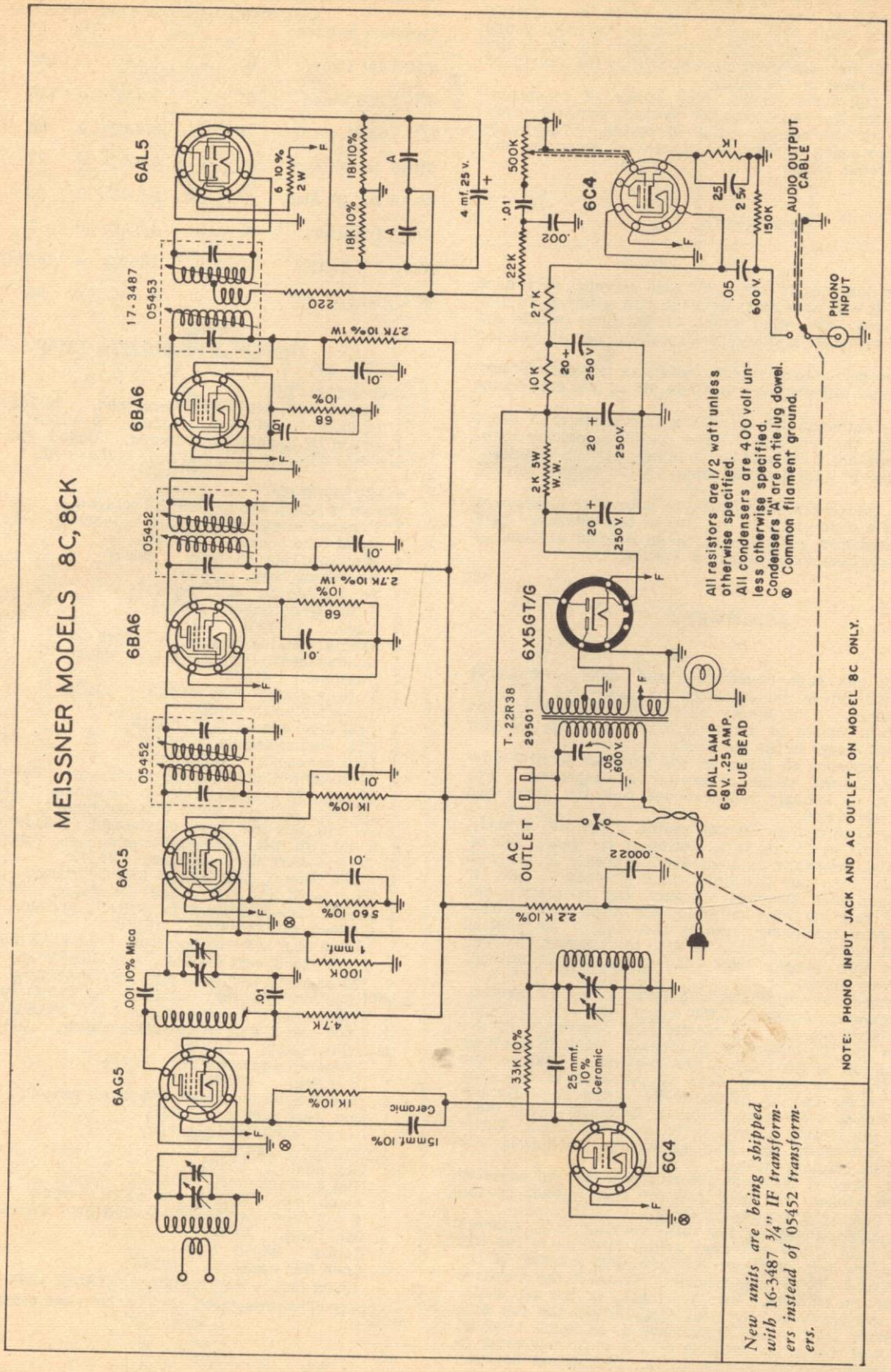


*New units are being shipped with 16-3487 3/4" IF transformers instead of 05452 transformers.*

## 8 TUBE F-M RECEPTOR KIT. MODEL 8CK.

VOLUME CONTROL AND SWITCH
Tubing
.05
See Detail "A"
Rubber Covered Shielded Lead
.01
18K
Black
Bare
.01
68
05452-AL2
.01
68
05452-AL1
13-7627 TUNING UNIT.
Blue - From Pin 5 of 6AG5 Tube.
Bare to pin 6 of 6AG5 tube.
220
Tubing
Brown
.01
10K
This Tie Lug A Part of 13-7627 Tuning Unit.
22K
.002
.01
6
Tubing
18K
Yellow
4 MFD
2.7K
2.7K
Black
Brown
Red
Brown - From Pin 3 of 6AG5 Tube
Twisted Leads From 05768 Coil.
Cond. Tie Lug Assem.
Blue
Power Trans.
Green
2K
From Dial Light.
Yellow
Audio Output
1K
10K
27K
Red
Black
Red
Bare
Blue
.05
+ 25MFD.
Red-Yellow
Line Cord
Strain Relief
Ant. Term.

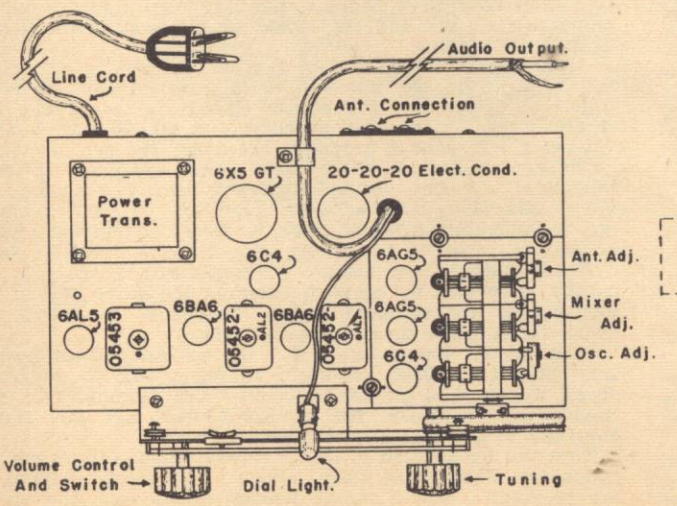


Dial String Detail - Viewed From Front of Chassis.

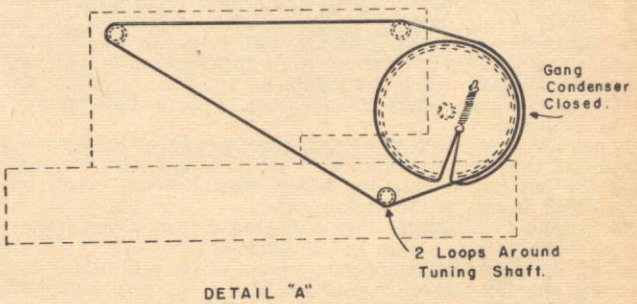


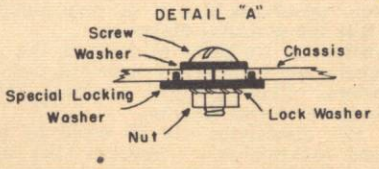

# COMPLETE INSTRUCTIONS FOR THE ASSEMBLY AND OPERATION OF THE

Meissner

# MODEL 6BK

## 3 Band AM Receiver

*This Kit available from your Local Distributor.*

### GENERAL

The Meissner Model 6BK receiver was designed to answer the requirements for a three-band receiver of widest utility at low cost. It covers the frequency ranges of 535 kc to 1750 kc, 1.7 mc to 5.7 mc, and 5.6 mc to 18.5 mc, giving reception of the American broadcast band and all short waves to 18.5 mc in overlapping bands.

One stage of tuned radio frequency amplification is used on all bands. This, in conjunction with two high-gain iron-core IF transformers provides excellent sensitivity, selectivity and signal to noise ratio.

Full AVC is applied to three stages to provide exceptional smoothness of tuning and performance. Manual volume and tone controls are provided on the front panel, as well as a band switch to efficiently select the band desired.

The large slide-rule dial has separate scales for each band and is illuminated from the top. The large drum provides a high ratio for fine tuning.

The receiver incorporates a well-filtered power supply and is designed for a PM type loudspeaker. The output transformer is a part of the receiver and matches a 3.2 ohm voice coil. A large speaker with a good baffle is recommended to handle the 3 watt output of the receiver and to fully realize the excellent audio fidelity.

The speaker output jack, antenna terminals and line cord are available at the rear of the chassis. Four lances on the sides of the chassis allow easy mounting.

The receiver is designed to be used with either a 105-120 volt or a 210-240 volt, 50-60 cps power source. The pictorial and schematic wiring diagrams show the connections for 105-120 volt line and describe the connections necessary to use 210-240 volt line.

### ASSEMBLY

Check all parts against the parts list as the kit is unpacked. Any shortages should be reported at once.

The parts should be mounted in accordance with the top view and the pictorial wiring diagram. The order of parts assembly is unimportant except that the band switch assembly should not be mounted until all other mounting is finished and all the wiring under and around the switch is completed.

Tube sockets, tie and ground lugs, filter capacitor mounting plate, tuning shaft bracket, output socket, antenna terminal, corner angle braces, output transformer, filter choke and dial bracket assembly mount with #6-32 screws, #6-32 hexagon nuts and #6 external tooth lockwashers except as follows: Do not use lockwashers on the tube sockets nor on the ground lugs where the lockwasher is an integral part of the stamping.

Mount the tube sockets so that the keyway is oriented as shown on the pictorial diagram. Do not use lockwashers. Hold the nut and tighten the screw with a screw driver so as to avoid damage to the socket wafer.

Be careful to mount tie lugs and ground lugs under mounting nuts wherever so shown in the pictorial diagram.

Mount the power transformer by means of the nuts and lockwashers shipped thereon, observing that it is positioned so that the wiring agrees with the pictorial diagram.

Mount the filter capacitor on its plate by pushing the ears of the capacitor through the slots provided and then twisting them with a pair of pliers. The capacitor terminals should be oriented as shown in the pictorial diagram.

Mount the Antenna, RF, Oscillator and IF coils by their studs with #6 nuts and lockwashers. Observe that these units are in their correct position as shown in the top view and that their leads or lugs emerge through the holes in the chassis as shown in the pictorial diagram.

The variable gang capacitor mounts by its studs with #6 nuts and lockwashers. CAUTION: Keep the capacitor plates fully meshed during the mounting and wiring process.

The dial drum should be mounted on the tuning capacitor shaft with the string opening at the top when the plates are fully meshed. Secure the drum with its set screws.

The volume and tone controls and band switch are mounted with 3/8" nuts and lockwashers. Index pins are provided to properly position the units and to prevent turning.

The variable padder mounts under the chassis as shown in the pictorial diagram.

Push the line cord through the hole provided and run it as shown until it reaches the switch. Then, with a pair of pliers, squeeze the bakelite parts of the strain relief on the line cord and force it into the chassis hole.

The tuning shaft is secured with a 'C' washer.

String the dial cord after all other work is completed.

### WIRING

Wire the set exactly as shown in the pictorial diagram and the circuit schematic. Complete the filament and power supply wiring first. The band switch should be mounted and wired last.

Observe carefully the colors used in the wiring, the use of a shield over the volume control wires and other features of the wiring. Wire the band switch with short, direct leads. For reasons of clarity, the pictorial diagram may show some of these leads slightly looped.

Read and study again the applicable sections under GENERAL CONSTRUCTION HINTS.

When you have completed the wiring, check it very carefully against the pictorial and schematic diagrams.

Check each connection to be sure that it is well soldered and not a 'rosin' joint. Be sure that there are no shorts to the chassis or to other leads.

### ALIGNMENT

After the wiring has been checked, the tubes may be plugged into their respective sockets, the line cord plugged into the proper outlet, and the set turned on by rotating the volume control clockwise.

Allow about 30 seconds for the set to warm up and check the voltages in the set with a high impedance voltmeter. The readings which you obtain should agree closely with those listed in the voltage chart. A 20,000 ohm per volt voltmeter was used in preparing the chart; the use of a lower impedance voltmeter will cause lower readings at some terminals. A line voltage different from the nominal 117 volts will also give different readings. If your readings are considerably different, look for a wiring mistake, faulty connection, tube in the wrong socket, or a defective tube.

If the voltages are correct, alignment may be started. An output meter may be connected across the voice coil of the loudspeaker for accurate output reference, or simply the audio output of the speaker may be used.

Plug in the loudspeaker, if it is not already connected, and connect a signal generator having a 455 kc modulated output to pin 8 of the 6SA7 converter tube, through a .1 mfd. condenser. Connect the ground terminal of the signal generator to the chassis of the receiver.

Turn the bandswitch to the broadcast band, fully mesh the condenser plates, and fully advance the volume control of the receiver. Use a strong enough signal from the signal generator to give a suitable indication of output from the receiver, but always use the least signal possible.

Adjust the four trimmers at the tops of the IF transformers to obtain the maximum output. As the output of the set rises, the output of the signal generator should be decreased accordingly. Repeat the adjustments carefully until the peaks have been reached.

Connect the signal generator to the antenna-ground terminals of the set, substituting a .0002 mfd. mica condenser for the .1 mfd. dummy. Adjust the dial pointer with the condenser still fully meshed until the pointer coincides with the mark on the left end of the dial scale. Secure the pointer to the string at this point. Tune the signal generator and the set to 1600 kc and carefully adjust the broadcast band trimmer of the oscillator coil for maximum output. On all three coils, the broadcast band trimmers are at the middle holes. Next adjust the broadcast RF and antenna trimmers for maximum output. Set the signal generator and receiver to 600 kc and while rocking the dial around the point, carefully adjust the 600 kc padder, on the side of the chassis, for maximum signal output.. Repeat the entire broadcast alignment procedure until no further improvement can be made.

Turn the band switch to short wave band #1 and tune the set and signal generator to 4.8 mc. Substitute a 400 ohm non-inductive resistor for the .0002 mfd. dummy. Adjust the oscillator trimmer, nearest the top of the can, for maximum output. Next adjust the RF and antenna trimmers, also at the tops of their respective cans, for maximum output. It may be necessary to rock the tuning dial back and forth slightly, (or the dial of the signal generator), as the RF trimmer is adjusted, to take care of the pulling between the RF and the oscillator tuned circuits.

Turn the band switch to short wave #2 and tune both the receiver and the signal generator to 17 mc. The RF trimmer (all these trimmers are at the bottom of their respective cans) should now be firmly tightened. (Do not force the screws) Now adjust the oscillator trimmer for maximum output.

At this point it is necessary to determine that the oscillator is tuned to the correct side of the desired signal. (The correct oscillator frequency is 455 kc above or higher than the desired signal.) That the oscillator is on the correct side can be determined by noting the image frequency. After adjusting the oscillator trimmer, change the generator setting to 17.91 mc. A weak signal should be noted at this point. If so, proceed with the alignment at 17 mc. If no signal can be heard at 17.91 mc but can be heard when the generator is tuned to 16.09 mc, the oscillator is running below the desired signal and the trimmer setting must be changed. Reset the signal generator to 17 mc and loosen the oscillator trimmer until a new peak is found. Check again for proper image frequency. When two peaks are noted on the oscillator trimmer, the correct peak is the one which occurs with the loosest (least capacity) setting.

Next adjust the RF and antenna trimmers. Here, due to pulling between the RF and oscillator, the tuning control must be rocked in order to obtain the maximum possible output or proper alignment. In adjusting the RF trimmer, the frequency may be pulled off calibration and it may be necessary to go back to the oscillator trimmer and reset the oscillator to make the dial scale agree with the actual frequency.

In adjusting the RF trimmer on the short waves, the RF stage may break in to oscillations. This is apt to happen if the trimmer was loose to begin with. As the trimmer is tightened, the RF stage will tune through the oscillator frequency, at which time it may oscillate. Up to this point the output has been increasing, whereas it now suddenly drops. The trimmer should not be loosened to return to this apparent point of maximum output as this is not the correct peak. The trimmer screw should be tightened further until the RF stage tunes through the region of oscillation. The correct peak can now be easily determined and will be found on the tight side of the oscillating or 'dead' spot.

After the preceding steps have been performed, it is advisable to start at the beginning and repeat all alignment steps again, to compensate for any misalignment due to reaction of one adjustment upon another. Only slight adjustments will be found necessary this second time, and the RF trimmer should not be tightened while adjusting the oscillator.

Now that your set is aligned, connect into a good antenna and ground system. A very short indoor antenna is sufficient for local broadcast reception. A good, well-insulated outdoor antenna will give better long-distance reception and is recommended for short wave reception.

## VOLTAGE CHART

Voltages measured to chassis with a 20,000 ohm/volt meter

| TERMINAL NO. | 1 | 2 | 3 | 4 | 5 | 6 | 7 | 8 |
|---|---|---|---|---|---|---|---|---|
| 6SK7 RF | 0 | 6.3AC | 3.4 | - | 3.4 | 85 | 0 | 250 |
| 6SA7 Conv. | 0 | 0 | 250 | 85 | -5* # | 0 | 6.3AC | - |
| 6SK7 IF | 0 | 6.3AC | 3.4 | - | 3.4 | 85 | 0 | 250 |
| 6SQ7 Det. | 0 | -.4* | 0 | -.25* | -.25* | 95 | 6.3AC | 0 |
| 6V6GT Audio | 0 | 0 | 240 | 250 | - | 240 | 6.3AC | 12 |
| 5Y3GT Rect. | NC | 260 | NC | 230AC | NC | 230AC | NC | 260 |

- Slightly negative * On 10 volt scale
# Dial at 1,000 kc on broadcast

## ESSENTIAL PARTS LIST

1 3-gang 3-position band switch 24-8273
1 3-gang variable condenser 21-5202
1 3-band antenna coil 14-1067
1 3-band RF coil 14-1068
1 3-band oscillator coil 14-1069
1 Input IF transformer 16-6662
1 Output IF transformer 16-6663
1 Dial scale 23-8235

## COMPLETE PARTS LIST

All the parts listed above plus the following:
1 Punched chassis
1 Dial drum
1 Dial scale bracket assembly
2 Dial scale mounting springs
1 Tuning shaft bracket
1 Tuning shaft
1 'C' washer (for tuning shaft)
1 Power transformer
1 Filter choke
1 Electrolytic filter capacitor, 20-20 mfd. 450 volt
1 Filter capacitor mounting plate
1 Output transformer
6 Octal tube sockets
1 Speaker socket and plug
1 Volume control, 500,000 ohms with switch
1 Tone control, 25,000 ohm
1 Pilot lamp socket
1 10 mfd. 25 volt electrolytic capacitor
1 .1 mfd. 400 volt paper capacitor
2 .05 mfd. 600 volt paper capacitors
7 .05 mfd. 200 volt paper capacitors
3 .01 mfd. 600 volt paper capacitors
1 .0039 mfd. mica capacitor
1 .003 mfd. mica capacitor
2 .00022 mfd. mica capacitors
1 .0001 mfd. mica capacitor
1 Variable padding capacitor 225 to 625 mmfd.
1 330 ohm 1 watt resistor
2 470 ohm 1/2 watt resistors
1ea. 22,000 ohm and 47,000 ohm 1/2 watt resistors
2 22,000 ohm 2 watt 10% resistors
1 33,000 ohm 1 watt 10% resistor
2 220,000 ohm 1/2 watt resistors
4 470,000 ohm 1/2 watt resistors
1 10 megohm 1/2 watt resistor
1 Each, line cord and strain relief
1 Panel lamp 6/8 volts, type 47
8"Braided tinned shielding
1 Each, type 5Y3GT, 6SA7, 6SQ7, and 6V6GT tubes
2 Type 6SK7 tubes
4 Each, mounting screws and washers
4 Angle braces (for chassis corners)
1 Dial scale pointer
4 Knobs
1 Each, dial string and dial string spring
2 Single insulated tie lugs
1 2 insulated tie lug
2 4 insulated tie lugs
1 3 insulated tie lug
9 Ground lugs (internal lockwasher, type #6)
1 Ground lug (for #8 screw)
45 #6-32 B.H. screws 5/16" long
58 #6-32 hexagon nuts
37 #6 external tooth lockwashers
3 Each, 3/8-32 nuts and 3/8 internal tooth lockwashers
1 Each, 1/4-40 nut and 1/4 internal tooth lockwasher
Additional part required for operation:
1 Permanent magnet type loudspeaker with 3.2 ohm voice coil
Wire and Solder

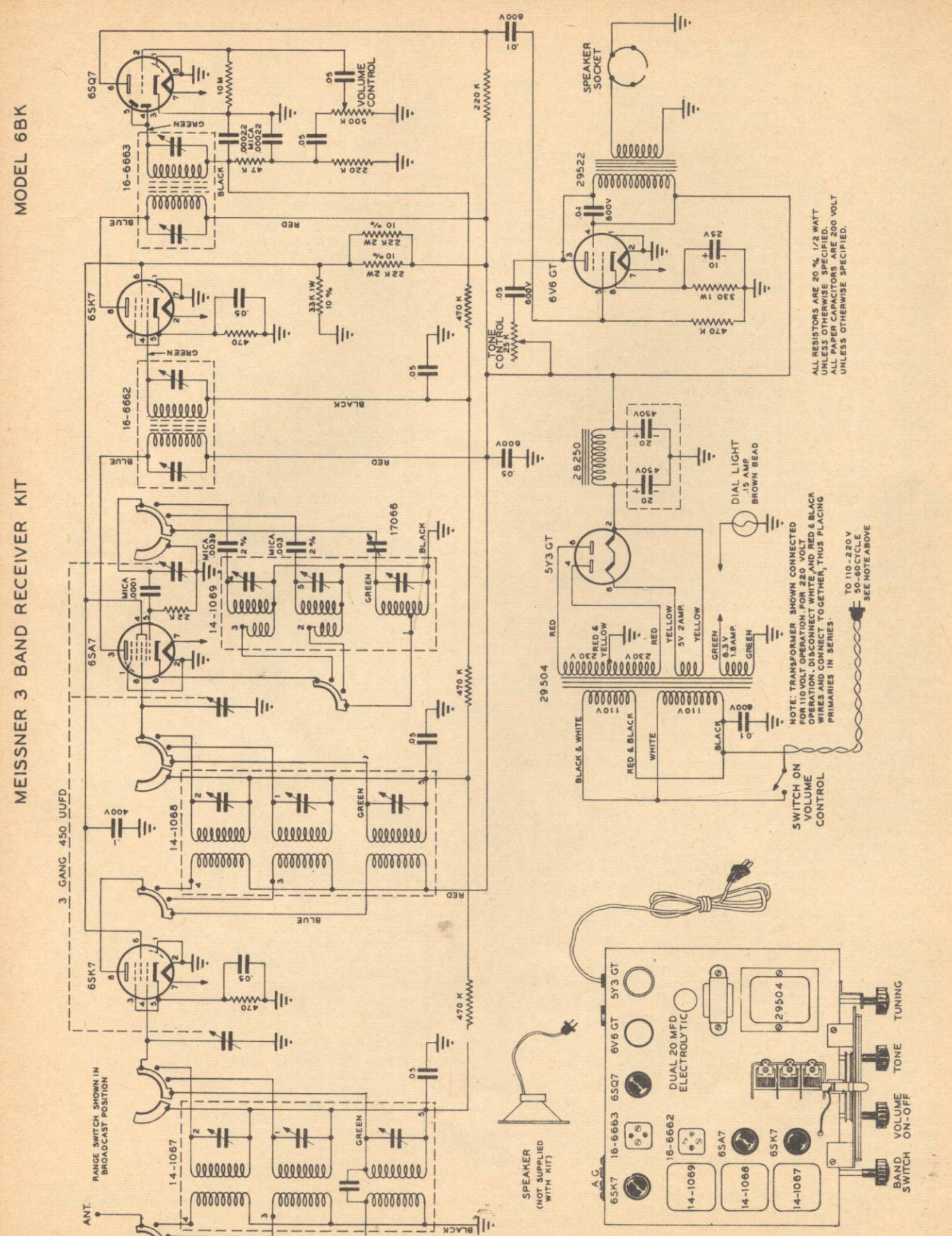
MODEL 6BK
MEISSNER 3 BAND RECEIVER KIT
3 GANG 450 UUFD
6SQ7
6SK7
6SA7
6V6 GT
5Y3 GT
16-6663
16-6662
14-1069
14-1068
14-1067
17066
29522
28250
29504
VOLUME CONTROL
TONE CONTROL 25 K
SPEAKER SOCKET
DIAL LIGHT .15 AMP. BROWN BEAD
ALL RESISTORS ARE 20 % 1/2 WATT UNLESS OTHERWISE SPECIFIED. ALL PAPER CAPACITORS ARE 200 VOLT UNLESS OTHERWISE SPECIFIED.
NOTE: TRANSFORMER SHOWN CONNECTED FOR 110 VOLT OPERATION. FOR 220 VOLT OPERATION, DISCONNECT WHITE AND RED & BLACK WIRES AND CONNECT TOGETHER, THUS PLACING PRIMARIES IN SERIES.
TO 110-220 V 50-60 CYCLE SEE NOTE ABOVE
SWITCH ON VOLUME CONTROL
RANGE SWITCH SHOWN IN BROADCAST POSITION
GND. ANT.
SPEAKER (NOT SUPPLIED WITH KIT)
DUAL 20 MFD ELECTROLYTIC
A.G.
TUNING
TONE
VOLUME ON-OFF
BAND SWITCH

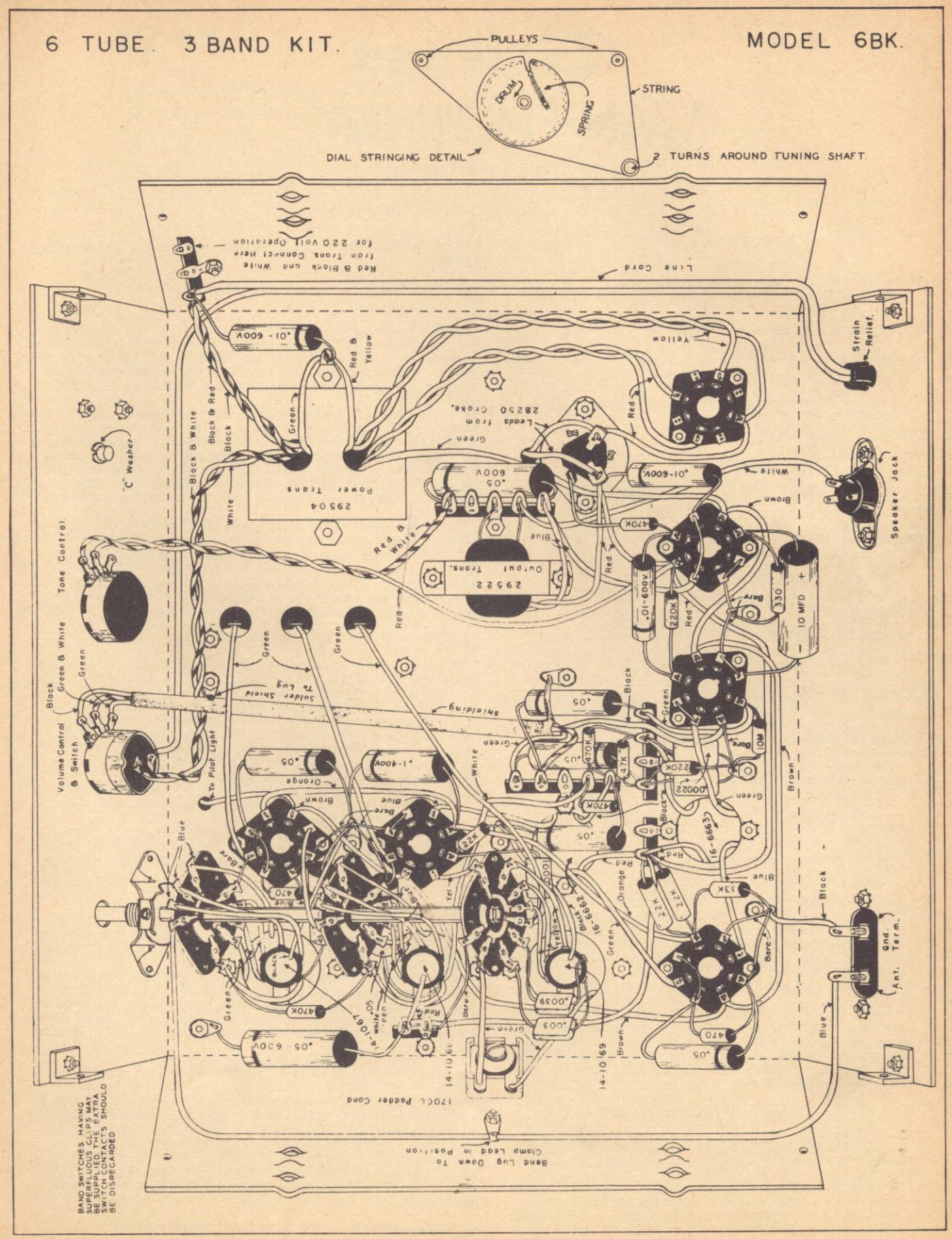
6 TUBE. 3 BAND KIT.
MODEL 6BK.
PULLEYS
DRUM
SPRING
STRING
DIAL STRINGING DETAIL
2 TURNS AROUND TUNING SHAFT
Line Cord
Red & Black and White Iron Trans. Connect Here for 220 Volt Operation
Strain Relief
Speaker Jack
"C" Washer
Tone Control
Volume Control & Switch
Solder Shield To Lug
To Pilot Light
Shielding
Power Trans
29504
Output Trans.
29522
Leads from 28250 Choke.
Band Lug Down To Clamp Lead in Position
17066 Padder Cond
Gnd. Ant. Term.
BAND SWITCHES HAVING SUPERFLUOUS CLIPS MAY BE SUPPLIED. THE EXTRA SWITCH CONTACTS SHOULD BE DISREGARDED

Meissner

# AM-FM TUNER

## MODEL # 9-1091-C

*This Tuner available from your Local Distributor.*

### SPECIFICATIONS

Power supply 105-125 volts, 50-60 cycles
CAUTION: DO NOT ATTEMPT TO OPERATE ON OTHER SUPPLY
Power consumption 75 watts
Type of circuit - Superheterodyne
Intermediate frequencies AM 455 kc
FM 10.7 mc
Chassis dimensions 10-1/4" X 16-5/8"
(Requires 1-1/4" between chassis and panel)
Panel dimensions 8-3/4" X 19"
Dial - slide rule 2" X 7-1/2" opening
Pointer travel 6-1/2"
Tuning knob ratio 15/1
Weight - less panel - 16 pounds
Add 4 pounds for 1/8" steel panel and braces
Output impedance - 500 ohm balanced and high impedance unbalanced
Antenna impedance
Broadcast - Standard
F M - - - - - 300 ohms

### NOMINAL PERFORMANCE

Sensitivity - less than 10 microvolts
Audio fidelity
Flat within ± 2 db from 30 to 15,000 cycles
Band width at 1000 kc
Sharp 7 kc
Broad 14 kc
Output
High impedance 11 volts maximum for 2-1/2% distortion
500 ohm 2 volts maximum for 2-1/2% distortion
Distortion
2-1/2% at full rated output
Less at lower levels
Tone control action
Bass boost at 40 cycles - 12 db
Treble suppression at 8000 cycles - 12 db
Hum
Maximum - 0.5 micro watts

### ACCESSORIES

The Meissner Model 9-1091C is supplied with knobs and control panel escutcheons and requires no additional parts (except mounting screws) for mounting in a console cabinet.

For rack panel mounting, a hardware kit is available consisting of 1/8" steel panel in gray or black, side mounting brackets, bottom cover plate and dust cover.

Also available for table top mounting is a steel cabinet and panel.

For a most excellent combination of units and one which will satisfy even the most discriminating listener, the Meissner 9-1091C plus the Meissner 4AJ or 4AK amplifier in combination with a good phonograph turntable and pickup, and a speaker which will handle he high fidelity output faithfully, will do the job at a moderate cost.

### INSTALLATION

In installation in either rack panel or cabinet, the following precautions should be observed if the best performance is to be realized.

1. Provide adequate ventilation around the unit to allow the natural air circulation to carry away the heat.

2. Any other equipment which might generate strong magnetic fields, such as phonograph motors or power transformers, should be mounted far enough away from the output transformer on the Tuner that they will not induce hum into this part.

### ANTENNA-GROUND

The two antenna terminals on the rear of the chassis are for connection of a twin lead 300 ohm transmission line leading to an FM antenna. No separate AM antenna is required. The circuits are so connected inside the chassis that on AM the transmission line and the FM antenna act as an AM antenna.

A heavy ground connection as short as possible should be connected to the ground terminal on the rear of the chassis. Cold water pipes or a galvanized rod driven several feet into the earth make good grounds, but the use of hot water, steam pipes or metal conduit should be avoided. The use of a good ground connection will do much to minimize the pickup of electrical interference carried into the tuner by way of the power line.

In these days of loop antennas and high sensitivity receivers, it is possible to get reasonably good reception without the use of a good ground connection, and the importance of a good ground has been all but forgotten. We would like to emphasize at this point that a good ground can be very important to the attainment of high quality broadcast reception and is usually worth all the effort or expense that it requires.

### SELECTOR SWITCH

The selector switch (see Fig. 1) has four positions: Phonograph, AM Sharp, AM Broad, and FM. In the AM Sharp position the unit is most selective. This position should be used for tuning AM stations when electrical or adjacent channel interference is severe. The Broad position is for high fidelity AM reception. It will be found most useful on stations broadcasting high fidelity program material. A highly efficient 10 kc whistle filter is incorporated to remove the annoying 10 kc beat note caused by adjacent channel stations and usually present in high fidelity reception.

The FM position of the selector switch switches the circuits for FM reception.

The Phonograph position of the selector switch connects the audio amplifier and tone control system to the phonograph input jack located on the rear of the chassis.

### PHONOGRAPH

A phonograph pickup of the crystal type or the high level magnetic type may be plugged into the phonograph input jack located on the back of the chassis. The compensating network used is satisfactory for either type.

This compensating network has of necessity been designed to compensate a wide variety of pickups. In case a high quality pickup is used for which the manufacturer recommends a compensating network which differs from the one used, then it is advisable to follow the recommendation of the pickup manufacturer.

### TONE CONTROLS

Bass control is provided (see Fig. 1) to give bass boost up to 12 db at 40 cycles. Flat response is obtained with the control rotated fully clockwise, bass response increasing with counterclockwise rotation of the control.

Treble control is provided (see Fig. 1) to give treble suppression up to 12 db at 8000 cycles. Flat response is obtained with the treble control rotated fully clockwise, treble response decreasing as the control is rotated counter-clockwise.

VOLUME CONTROL, SWITCH and TUNING are identified on Fig. 1.

## POWER AMPLIFIER

If this Meissner tuner is to be used with a power amplifier, a power amplifier should be chosen which will give full power output when driven with the maximum output of the tuner (see "Nominal Performance" ratings). It is not essential that the power amplifier have exactly the right gain, but if best results are to be obtained the gain of the power amplifier should not greatly exceed the requirement. If, for instance, the power amplifier has an input jack for a phonograph pickup, then the tuner might be fed into this jack through a voltage divider made from a 30,000 ohm potentiometer. This potentiometer should be adjusted to a level where full rated output (11 volts) from the tuner will just produce full power output from the power amplifier. It is not recommended that the tuner be fed into the Microphone input jack of a power amplifier.

An auxiliary power outlet is provided on back of tuner chassis. It is controlled by the tuner on-off switch and may be used for the associated power amplifier if one is used.

## OUTPUT

Output terminals are provided on the back of the chassis (see Fig. 2). Two output impedances are provided, one for output into high impedance loads (30,000 ohms or higher) and one for output into a 500 ohm balanced transmission line. The high impedance output may be used for feeding an amplifier located only a few feet from the tuner and whose input impedance is 30,000 ohms or greater. If the amplifier impedance is greater than 30,000 ohms and if the cable capacity approaches 1000 uuf., then the high audio frequency response may be improved by shunting the amplifier input with a carbon resistor of such a value that the resulting impedance will be approximately 30,000 ohms. As a typical example, if the input of the amplifier is a 100,000 ohm potentiometer, then shunting it with a 50,000 ohm fixed resistor would result in an impedance of approximately 33,000 ohms, which is close enough to the required 30,000. Connection should be made through a low capacity shielded cable. If the cable capacity greatly exceeds 1000 uuf. then serious attenuation of the high audio frequencies will result, and a 500 ohm line should be used instead of the high impedance connection.

IMPORTANT: When using the high impedance output of the tuner working into a load of 30,000 ohms or greater, the 500 ohm output terminals should be connected together through a 500 ohm fixed resistor.

If a 500 ohm transmission line is used, then the amplifier may be located a considerable distance from the tuner, and except in the presence of strong electric fields the line need not be shielded. If the amplifier is not equipped for 500 ohm input, a line coupling transformer with balanced 500 ohm winding should be used for coupling the transmission line into the power amplifier. It should be noted that the 500 ohm output terminals on the tuner are balanced to ground; that is, neither of the 500 ohm terminals is grounded but the 500 ohm winding on the transformer is center tapped with the center tap connected to chassis. For this reason the 500 ohm output should not be worked into an unbalanced 500 ohm line.

## REPLACEMENT PARTS

For those parts which might not be readily available in the average service shop, the Meissner part numbers are shown on the circuit diagram. They may be ordered from the manufacturer by reference to these numbers.

## ALIGNMENT AM

The AM alignment may be carried out with an AM signal generator and an output meter. Connect a 500 ohm resistor across the 500 ohm output terminals of the tuner. The output meter may be connected from the high impedance output terminal to chassis.

For IF alignment introduce a 455 kc 30% modulated signal into the signal grid of the 6BE6 (Pin # 7) through a .1 ufd. coupling condenser. The output of the signal generator should at all times be kept as low as will give a satisfactory reading on the output meter. With the selector switch in the sharp position, adjust the top and bottom adjustments of IF transformers 04216, 04216, and 04238 for maximum output. Now move the selector switch to the broad position and check the symmetry of the IF response curve by swinging the signal generator frequency. The response in the broad position should be double peaked, the dip between the peaks falling at 455 kc. The peaks should be equally spaced on either side of 455 kc and should be of approximately the same amplitude. The gain in the broad position will be less than the gain in the sharp position. If the above conditions do not exist, then a careful recheck of alignment in the sharp position should be carried out.

For RF alignment introduce a 30% modulated signal through a 200 uuf. dummy antenna to one of the FM antenna terminals. First check dial pointer position by turning the gang condenser to full mesh and setting the pointer to the last reference mark at the low end of the dial scale. With signal generator and tuner set to 1400 kc, adjust the oscillator trimmer for maximum output, then adjust RF and antenna trimmers for maximum output.

## ALIGNMENT FM

For FM alignment a frequency modulated generator (60 to 400 cycle modulation, 400 kc sweep) and an oscilloscope are required. Connect the modulation source on the signal generator into the horizontal amplifier of the oscilloscope. It may be necessary to connect a phase shifting network in this line between the signal generator modulating source and the oscilloscope horizontal amplifier in order to get the correct pattern on the oscilloscope. Connect the tuner output to the vertical amplifier input of the oscilloscope.

Introduce a 10.7 mc (400 kc sweep) signal into the grid of the first 6AU6 limiter tube (Pin # 1) through a .01 ufd. condenser. Make the ground connection of the generator to the center post of the 6AU6 socket with as short a lead as possible. Remove the last 6AG5 IF amplifier tube to avoid the possibility of stray signals coming through the IF system and confusing the discriminator alignment procedure. Adjust the signal generator sweep and signal amplitude, and the oscilloscope for a pattern like the discriminator pattern shown in Fig. 3. Adjust the top adjustment on the 04194 discriminator coil for maximum vertical amplitude on the oscilloscope pattern and adjust the bottom adjustment on this coil for best symmetry of the pattern about the center. Repeat these two adjustments until no further improvement can be made. This completes the adjustment of the discriminator coil. Replace IF tube.

For alignment of the IF amplifier the same oscilloscope setup is retained except the input to the vertical amplifier. Feed the input to the vertical amplifier with audio taken from the first limiter grid return. This point is identified as point X on the circuit diagram of Fig. 3. Connection should be made to this point through a 1 megohm isolating resistor as shown by dotted line in Fig. 3.

Introduce a 10.7 mc (400 kc sweep) signal into the signal grid of the 6BE6 (Pin # 7) through a .01 ufd. condenser. Make the ground connection of the signal generator to the center post of the 6BE6 socket with as short a lead as possible. Adjust signal generator and oscilloscope to obtain a pattern like the IF pattern shown in Fig. 3. Adjust top and bottom adjustments on the four 04193 IF coils for maximum amplitude and symmetry of the pattern, keeping the signal level from the generator as low as possible throughout the adjustment. If the pattern tends to become double peaked or badly unsymmetrical during adjustment, the trouble is probably due to incorrect placement of some of the connecting leads in the test setup. Corrections should be made to eliminate the trouble and the adjustments repeated.

For the high frequency adjustments the same oscilloscope setup may be retained. In connecting the signal generator to the antenna terminals, the signal generator is not connected to chassis as in the previous connections. Connect two 150 ohm resistors to the two antenna terminals on the tuner. Connect the other ends of these two resistors to the two generator output terminals. If the setting of the dial pointer has been previously checked during AM alignment, it is not necessary to recheck it at this point. Set the signal generator and the tuner to 106 mc and adjust the oscillator trimmer (identified in Fig. 1) to bring the pattern to center on the oscilloscope. In case this is possible with two different positions of the oscillator trimmer, use the position of least capacity. Adjust the RF and Antenna trimmers (identified in Fig. 1) for the greatest amplitude of the pattern keeping the generator output as low as possible during the process of adjustment.

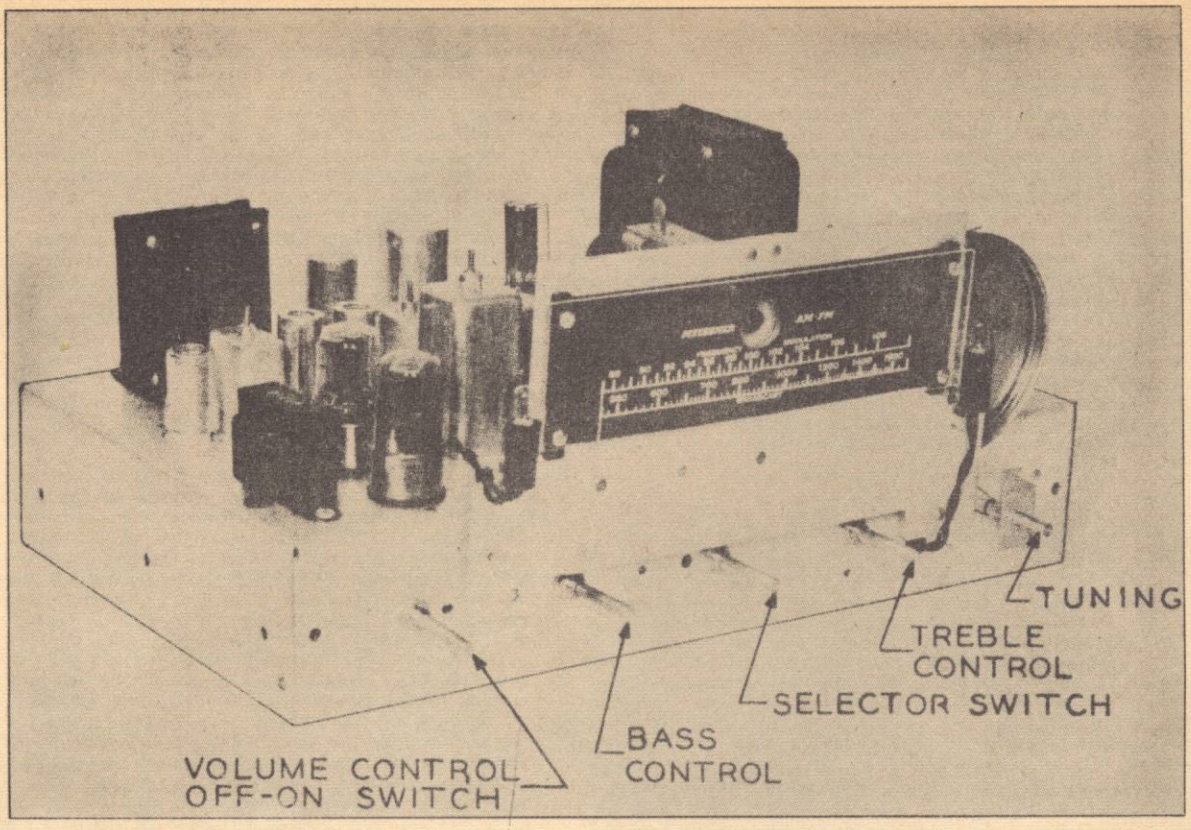
TUNING
TREBLE CONTROL
SELECTOR SWITCH
BASS CONTROL
VOLUME CONTROL OFF-ON SWITCH

FIG. 1

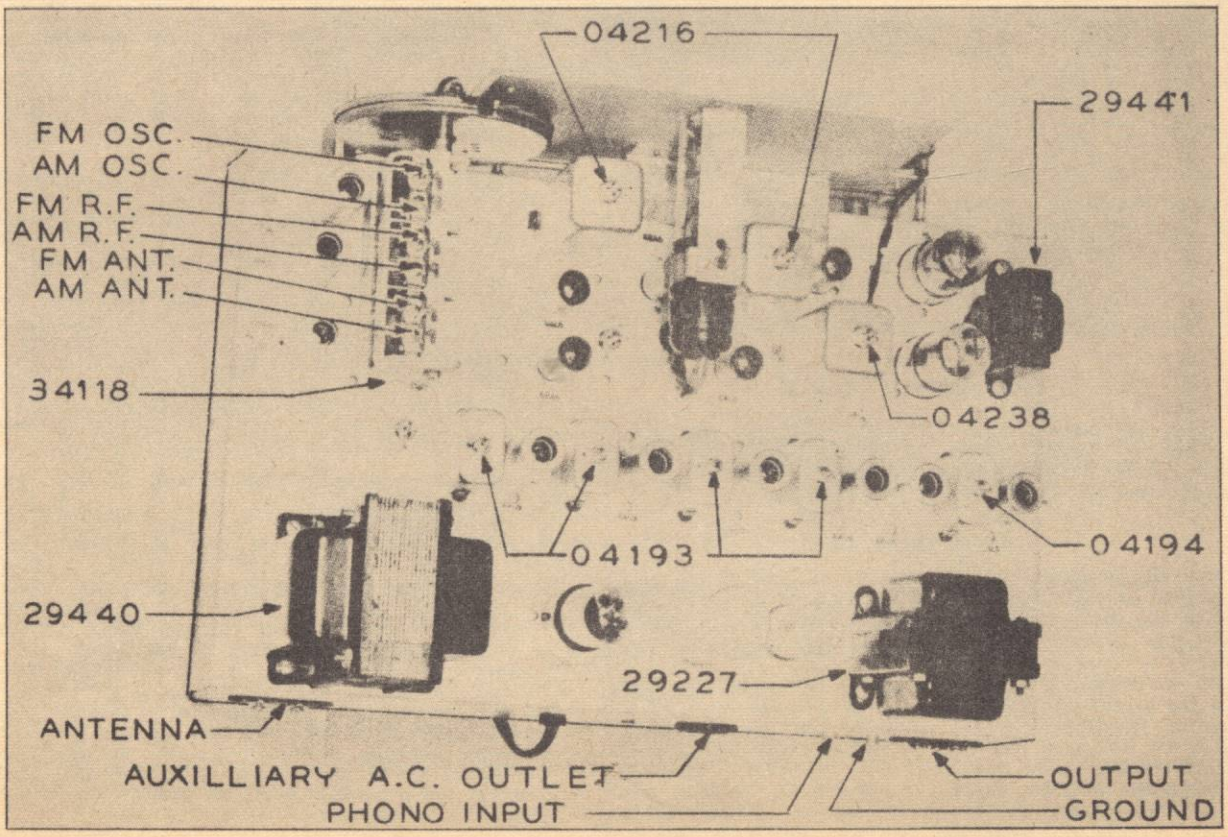
04216
29441
FM OSC.
AM OSC.
FM R.F.
AM R.F.
FM ANT.
AM ANT.
34118
04238
04193
04194
29440
29227
ANTENNA
AUXILLIARY A.C. OUTLET
PHONO INPUT
OUTPUT
GROUND

FIG. 2

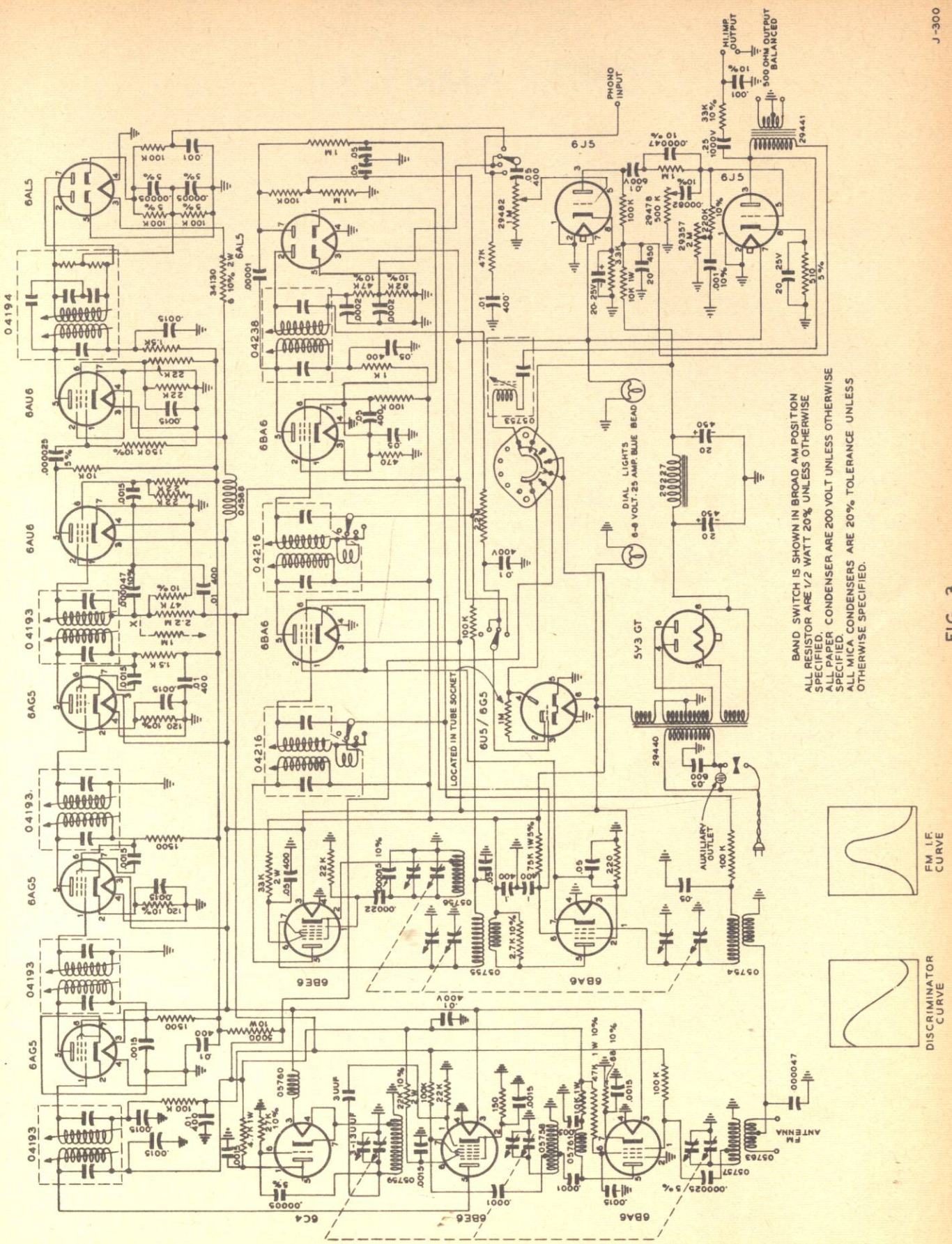
J-300
PHONO INPUT
HI IMP. OUTPUT
500 OHM OUTPUT BALANCED
6J5
6J5
6AL5
6AL5
6AU6
6AU6
6BA6
6BA6
6AG5
6AG5
6AG5
6U5/6G5
5V3 GT
6BE6
6BA6
6BE6
6BA6
6C4
04194
04193
04193
04193
04193
04238
04216
04216
04380
29441
29427
29440
09753
09754
09755
09756
09757
09759
09760
09763
DIAL LIGHTS
6-8 VOLT-.25 AMP. BLUE BEAD
LOCATED IN TUBE SOCKET
AUXILIARY OUTLET
FM ANTENNA
BAND SWITCH IS SHOWN IN BROAD AM POSITION
ALL RESISTOR ARE 1/2 WATT 20% UNLESS OTHERWISE SPECIFIED.
ALL PAPER CONDENSER ARE 200 VOLT UNLESS OTHERWISE SPECIFIED.
ALL MICA CONDENSERS ARE 20% TOLERANCE UNLESS OTHERWISE SPECIFIED.
FM I.F. CURVE
DISCRIMINATOR CURVE

FIG. 3

Meissner

# POWER AMPLIFIER

*This amplifier is presented only as a general guide in amplifier construction. The essential parts, which are available from Thordarson-Meissner are indicated in the Parts List. (For 29511 use T-22R31, 29224 use T-20C55, 29512 use T-22S66)*

## GENERAL

The Meissner power amplifier is a four tube amplifier designed to be used with AM-FM tuners, public address systems, home radios, in schools, in factories, or in any application where 20 watts of audio power is required.

Four tubes are used as follows: A type 6SN7GT serves as a voltage amplifier and phase inverter to drive the pair of 6L6G's in class AB1. A type 5Y3GT serves as the rectifier in a husky, well-filtered power supply.

The output of the power amplifier is flat within 2 db between 45 and 20,000 c.p.s.

Hum and noise together are down 65 db below full output.

Distortion at full 20 watts output is only 5%.

The audio input is through a standard type input jack. The input is high impedance, 500,000 ohms. Approximately 2.5 volts R.M.S. audio is required to produce full output. A volume control is made an integral part of the power amplifier to permit its use with tuners having relatively high output.

A terminal strip at the rear allows the choice of a number of output impedances. This gives the Meissner power amplifier unusual flexibility in application to various voice coil and line impedances.

The power amplifier is designed for a 105-125 volt, 50-60 c.p.s. power source, only. Power consumption is 90 watts.

The Meissner power amplifier is a very compact, self-contained unit. Its clean lines and size lend it to portability, and increase its application possibilities.

## ASSEMBLY (4AK)

Check all parts against the parts list as the kit is unpacked. Any shortages should be reported at once.

All small parts, such as tube sockets, tie lugs, brackets, etc., are mounted with 6-32 round-head screws 5/16" long, #6-32 hexagon nuts, and #6 external tooth lockwashers. Use the pictorial wiring diagram for a guide in your work.

Mount the 4 octal tube sockets as shown, noting particularly the position of the center guide pin slot. These sockets mount from the under side of the chassis.

Mount the pilot light socket as shown.

Mount the single-insulated tie lug under the chassis as shown. Note that there are two single-insulated tie lugs, one a mirror image of the other. Be sure to use the correct one here.

Mount the 2-insulated tie lug as shown.

Mount the 4 aluminum angles at the corners of the chassis to strengthen it.

Mount the 6-terminal strip at the rear of the chassis in the long oval opening. Note that this strip mounts from the outside of the chassis.

Mount the other single-insulated tie lug as shown, at the rear of the chassis.

Mount the input jack at the rear of the chassis, as shown. This jack mounts from the inside of the chassis.

Mount the volume control at the rear of the chassis as shown, securing with a 3/8" nut.

Mount the fuse holder at the rear of the chassis as shown. First remove the nut and lockwasher attached to the fuse holder and slip the holder in the hole from the outside of the chassis, so that the fibre washers rests between the chassis and the cap of the holder. Then slip on the lockwasher and nut from the inside of the chassis and tighten securely, with the holder in the position shown.

Mount the ruby jewel at the front of the chassis as shown, noting that this mounts in front of the pilot bulb socket.

Mount the toggle switch at the other hole at the front of the chassis as shown. Both the ruby jewel and the switch mount with the 3/8" nuts attached. Adjust the position of the nuts on the switch bushing so that the bushing is flush with the edge of the nut at the front of the chassis.

Mount the 4 angle feet as shown.

Mount the power transformer from the top of the chassis on the side having the toggle switch. Mount with #8-32 screws and lockwashers as shown. Run the leads through the chassis hole provided. Note that a ground lug is mounted under one of the nuts.

Mount the filter choke on the under side of the chassis as shown, using #10-32 screws and lockwashers. Mount the choke with the leads on the side next to the power transformer.

Mount the output transformer on the top of the chassis, using #8-32 screws and lockwashers. Mount so that the long leads come through the hole nearest to the center of the chassis.

Mount the electrolytic filter condenser in the chassis slots provided for the mounting lugs. Twist the lugs to an angle of about 45 degrees from the underside of the chassis, with pliers. Mount so that the lugs appear as shown. Be sure the condenser is firmly mounted.

Mount the 4 stand-off posts at the corners of the chassis. These mount with #8-32 screws and lockwashers, with lockwashers between the heads of the screws and the chassis and also between the ends of the posts and the chassis, to prevent any turning.

Push the line cord into the hole at the rear of the chassis far enough for the cord to reach the switch. Determine where the cord should be secured to the chassis and place the two bakelite parts of the strain relief around the line cord at this place. Squeeze tightly with pliers and force into the 1/2" chassis hole.

You are ready to wire the amplifier.

## WIRING (4AK)

Cable the leads from the output transformer, using the stitching thread provided. Run these cabled leads along the edge of the chassis and connect to the 6-terminal strip, paying attention to the color code used.

Note that the pictorial wiring diagram tells exactly how to wire the amplifier, including the color of wire used. Follow this diagram carefully for all wiring steps.

Use a hot, well-tinned soldering iron in soldering all connections. Heat the connection thoroughly and allow the solder to flow smoothly over the joint.

Connect one of the line cord wires to a lug of the switch. Carefully separate the two parallel wires of cord back to the fuse holder. Run the wire to the switch along the edge of the chassis alongside the cabled output leads. Cut the other line cord wire to a convenient length and connect to the fuse holder.

Wire the amplifier in accordance with the pictorial wiring diagram, checking each wiring operation against the pictorial. Place each component part in exactly the position shown. Observe polarities on the electrolytic condensers, and observe grounded-foil ends of paper condensers. Where necessary, shorten leads on resistors and condensers.

Keep the wirewound resistor off the electrolytic condensers nearby so that they will not be damaged by the heat.

Keep the metal case of the line filter condensers from touching other wiring or terminals.

Check all of your wiring when completed against both the pictorial and the circuit schematic.

Check every connection to be sure it is well soldered.

Check the wiring carefully to be sure there are no short circuits between wires, leads, or to the chassis. Push the insulation of the push-back wire up against the connections as added protection against shorts.

Insert the pilot bulb in its socket and slip the light shield over the bulb to direct the rays into the jewel.

Insert the tubes in their respective sockets, being sure that they are firmly seated.

Slip the dust cover over the top of the chassis, over the four stand-offs. Place this cover on with the hand-holds nearest the rear. Screw down tightly with 8-32 screws and lockwashers.

Insert the 2 ampere fuse in the fuse holder, screwing in place firmly.

Plug the unit in the proper power outlet, turn it on, and after the tubes have warmed up, take a set of voltage readings. Your readings should agree within reasonable limits with the values shown in the table. Remember that a voltmeter with lower impedance than the one used in making the table will cause the voltages to be lower at some of the terminals.

If the voltages are correct, fasten the bottom cover plate in place, using the rubber bumper feet at each corner, with 3/8" long 6-32 round-head screws.

## INSTALLATION

The amplifier should be installed as close to the tuner as possible. This allows the use of a short line between the amplifier and the tuner with very little chance for pickup of extraneous hum and noise. In all cases a shielded line must be used.

A typical installation of the amplifier is in a large cabinet along with the tuner and loudspeaker, and in many cases, an automatic record changer.

Where necessary, the line may be several feet long between the tuner and the amplifier, provided it is a high quality, low-capacity line terminated with a resistor of such value that the parallel resistance of this added resistor at the amplifier's input and the 500,000 ohm resistance of the input circuit of the amplifier is approximately the same as the output impedance of the tuner.

The amplifier generates a considerable amount of heat; consequently, it should be installed to allow free circulation of air about the unit. Nothing should be placed on top of the amplifier nor right up against the sides.

This amplifier is designed for operation from a 105-125 volt, 50-60 c.p.s. line, only. Be sure of the power source before connecting the amplifier.

The length of the leads from the output of the amplifier to the loud speaker is not critical. In running very long lines at the higher impedance taps, place the line so it is not in the direct vicinity of 60 c.p.s. power wiring, and especially avoid power wiring running parallel to the line. In installations requiring a long line in the presence of strong electrical fields, a shielded line may be required.

The amplifier should be installed, at least initially, where the volume control can be adjusted. If used with a tuner having a power outlet controlled by the on-off switch of the tuner, such as the Meissner Model 9-1091C, it is not necessary to bring the switch of the amplifier out to the front. It may be turned on and left on all the time, the unit being controlled by the switch on the tuner.

To use this amplifier with a phonograph pickup, it will in most cases be necessary to provide some pre-amplification ahead of the amplifier. Most AM-FM tuners, such as the Meissner Model 9-1091C, have provision for phonograph input which utilizes the audio section of the tuner with its tone and volume controls.

The output terminals of this amplifier allow a wide variety of impedances to be matched to the amplifier, such as all the common voice coil and line impedance values. To connect a speaker having a voice coil impedance of 15 ohms, for example, simply connect the speaker voice coil leads to the output terminals marked common and 15 ohms.

## OPERATION

The loudspeaker or speakers used with this amplifier should be capable of handling the normal 20 watts output safely, with adequate reserve power handling ability to take care of the peaks of power output.

With the amplifier properly installed, operation becomes a simple procedure. Plug the audio output line from the tuner into the input jack of the amplifier.

Turn on the tuner and amplifier and tune in a moderately strong station. Reduce the volume control setting of the amplifier to the lowest setting that gives satisfactory volume, with the tuner volume control at normal setting.

With tuners having the bass boost control built into a tap on the volume control, such as the Meissner Model 9-1091, the volume control of the tuner should be set at approximately 1/2 rotation and the volume control of the amplifier adjusted to give satisfactory volume.

With the volume control of the amplifier adjusted as instructed, volume may be adjusted at the tuner and there will be a minimum of hum, noise, and distortion.

If there is distortion when operating at high volume levels, check to see that the impedance of the voice coil is properly matched by connection to the proper output terminals. Also check to see if the loudspeaker is designed to handle the high output of the amplifier.

If there is still distortion, the tuner may be producing it. Check this by reducing the volume control setting of the tuner and advancing the volume control setting of the amplifier. If these checks do not clear up the distortion, look for a defective tube.

VOLTAGE CHART

Measured to chassis

Taken with 20,000 ohms/volt meter

| Terminal Number | 1 | 2 | 3 | 4 | 5 | 6 | 7 | 8 |
|---|---|---|---|---|---|---|---|---|
| 6SN7GT | 0 | 108 | 4.1 | 42 | 200 | 81 | 6.3AC | 0 |
| 6L6G No. 1 | 0 | 0 | 362 | 272 | 0 | 147 (tie-point) | 6.3AC | 22 |
| 6L6G No. 2 | 0 | 0 | 362 | 272 | 0 | 0 | 6.3AC | 22 |
| 5Y3GT | 0 | 372 | 0 | 365AC | 0 | 365AC | 0 | 372 |

## PARTS LIST

1 Chasis, 05945
4 Angle brackets, 19197
4 Mounting brackets, 19133
1 Power transformer, 29511
1 Output transformer, 29512
1 Filter choke, 29224
1 Pilot light socket, 19844
4 Octal sockets, 25-8209
1 Phono jack, 29253
1 Tie lug, 1 insulated, 15787
1 Tie lug, 1 insulated, 25-5732
1 Tie lug, 2 insulated, 25-5731
1 Toggle switch with nuts, 19354
1 Ruby jewel with nut, 19249
1 Fuse holder with washer & nut, 24294
1 Fuse, 2 amp. type 3AG, 25231
1 Volume control, 500,000 ohms, 29487
1 Electrolytic filter condenser, 20-20-10 ufd. 34155
2 Electrolytic condensers, 50 ufd., 50 V., 28106
2 .05 ufd., 600 V.,oil impregnated metal clad condensers, 28172
3 .05 ufd., 600 V., paper condensers, 28115
1 .01 ufd., 400 V., paper condensers, 28119
1 .001 ufd., mica condenser, CM30A102K
1 220 ohm 5 watt wirewound resistor, 28135
1 6,800 ohm 2 watt resistor, RC40AE682M
1 100,000 ohm 1/2 watt resistor, RC20AE104K
1 2,200 ohm 1/2 watt resistor, RC20AE222K
1 1 megohm 1/2 watt resistor, RC20AE105K
1 220,000 ohm 1/2 watt resistor, RC20AE224K
3 470,000 ohm 1/2 watt resistors, RC20AE474K
2 47,000 ohm 1/2 watt resistors, RC20AE473J
1 2,700 ohm 1/2 watt resistor, RC20AE272J
2 12,000 ohm 2 watt resistors, RC40AE123K
1 Line cord, 12434
1 Line cord strain relief, 29414
1 Pilot light, 6-8 V., .15 amp., 19711
1 Light shield, 19795
1 Length cabling thread, 13491
4 Stand-offs, 4-31/32" long, 05985
1 Dust cover, 05949
1 Bottom cover, 05948
4 Rubber bumpers, 14269
1 Supply of screws, nuts, and other hardware
1 6-terminal strip, 21720
1 Each, type 5Y3GT and 6SN7GT tubes
2 Type 6L6G tubes

Meissner

# POWER AMPLIFIER

Models 4A, 4AJ, and Kit # 4AK

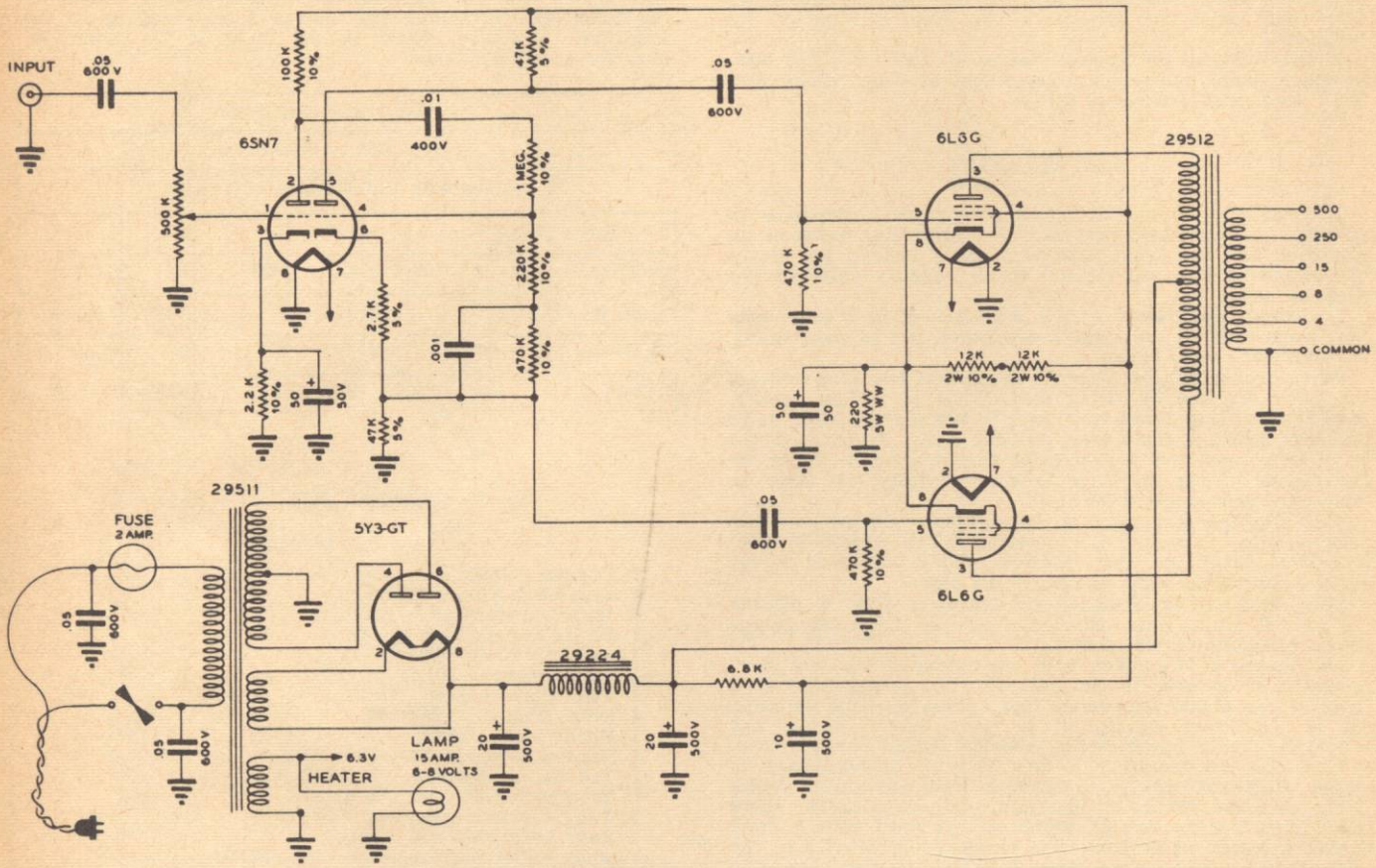


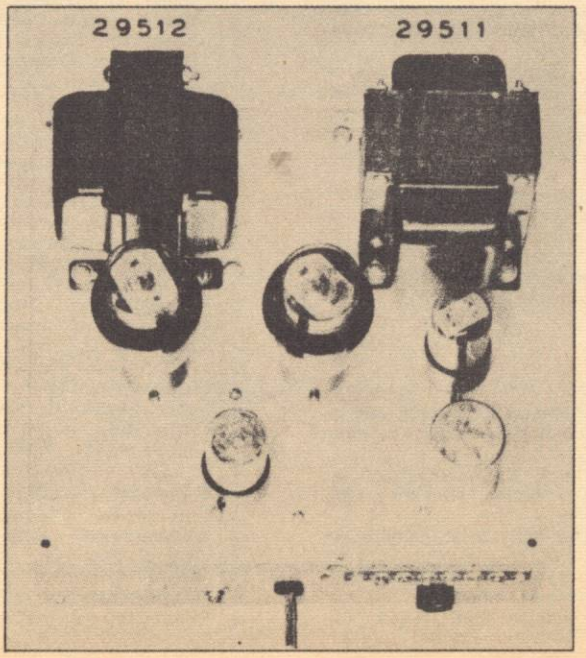


Model 4A is supplied in cabinet with hinged lid.

Top view Model 4AJ and Kit #4AK

4 TUBE POWER AMPLIFIER KIT. MODEL 4AK

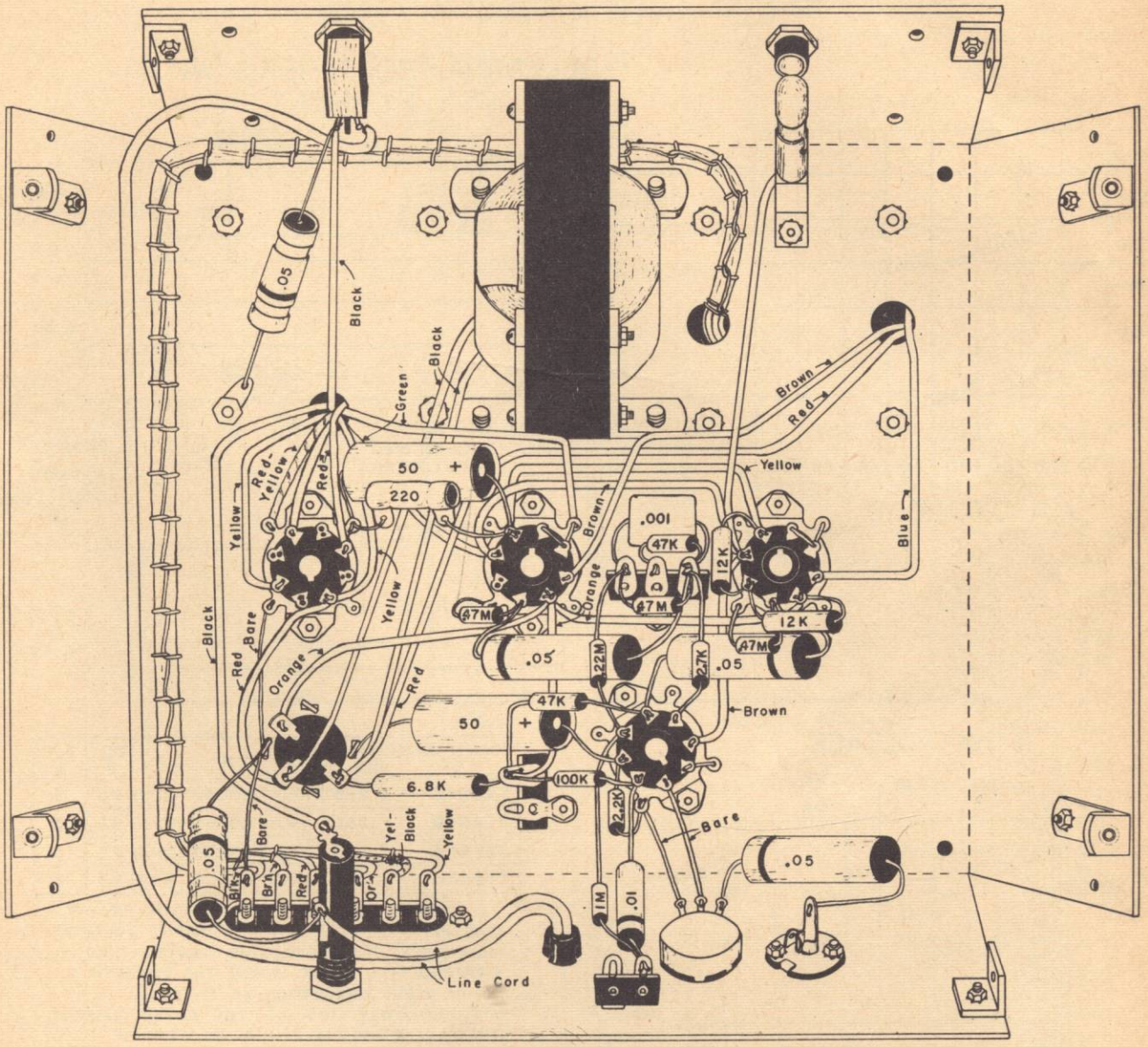


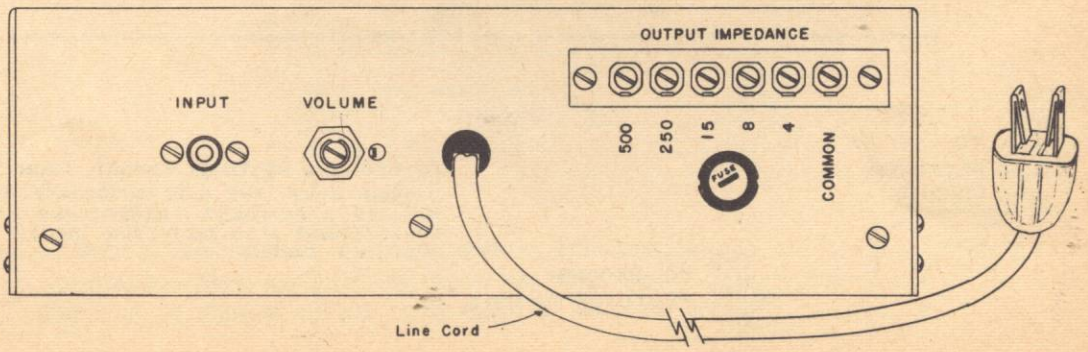

# CIRCUITS FOR THE BUILDER FROM MANY SOURCES

(Footnoted References indicate the circuit source. Those not footnoted are from Thordarson-Meissner designed circuits. Thordarson-Meissner components are indicated by giving their part number. All parts may be purchased through reputable dealers.)

## POWER SUPPLIES

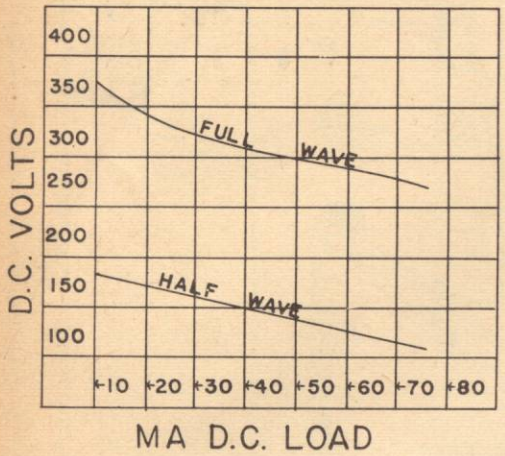


### SELENIUM RECTIFIERS WITH 6.3V 1.5A FILAMENT

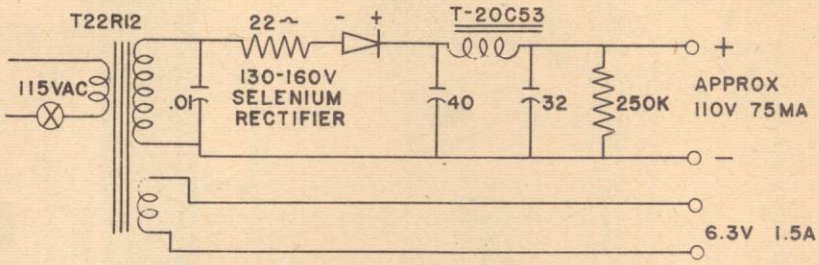


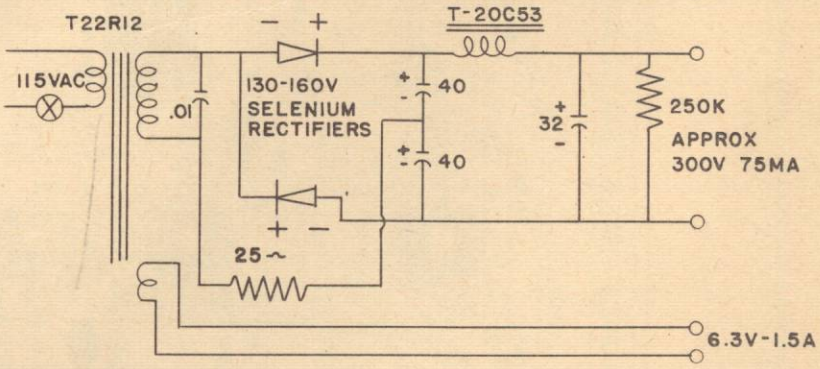


### LOW VOLTAGE

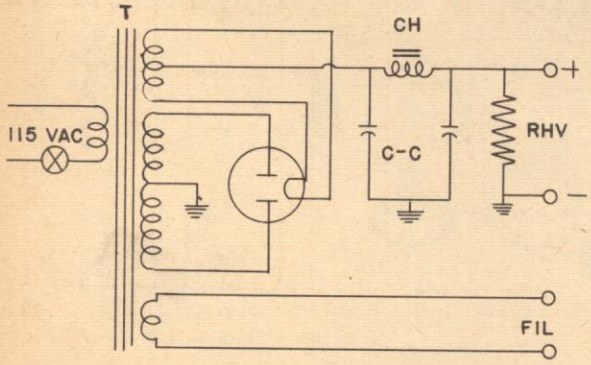


| TRANSFORMER T. | APPROX DC HV | MA DC | CH | C-C | FIL V | FIL A |
|---|---|---|---|---|---|---|
| T22R05 | 225 | 120 | T20C53 | 10-10 | 6.3 | 5 |
| T24R06 | 250 | 150 | T20C54 | 10-10 | 6.3 | 5 |
| T22R35 | 350 | 340 | T20C55 | 10-10 | 6.3 | 7 |
| T22R36 | 500 | 200 | T20C56 | 8-8 | 6.3 | 5 |

THESE MATCHED POWER SUPPLIES PROVIDE THE HOBBYIST WITH DIRECT CURRENT VOLTAGES ORDINARILY ENCOUNTERED IN AMATEUR AND EXPERIMENTAL WORK. WHEN THE BLEEDER R IS OF SUCH MAGNETUDE AS TO DRAIN APPROXIMATELY 10% OF THE RATED CURRENT, THESE SUPPLIES HAVE A REGULATION OF APPROXIMATELY 15% AND A RIPPLE OF LESS THAN 1%

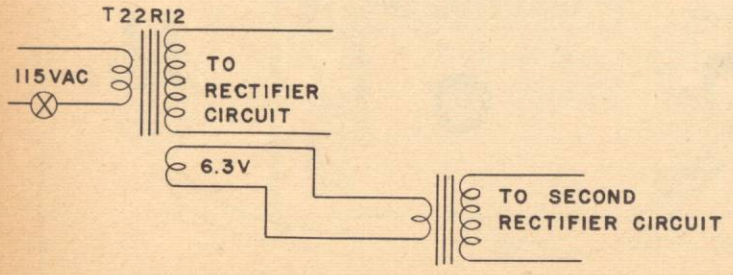


TO EXCITE A RECTIFIER CIRCUIT FROM THE HIGH VOLTAGE WINDING WHILE THE 6.3V SECONDARY SIMULTANEOUSLY EXCITES A FILAMENT TRANSFORMER AS A STEPUP TRANSFORMER ALSO DELIVERING 150VAC FOR ANOTHER RECTIFIER CIRCUIT

## MULTIPLE LOW VOLTAGE OUTPUT SUPPLIES

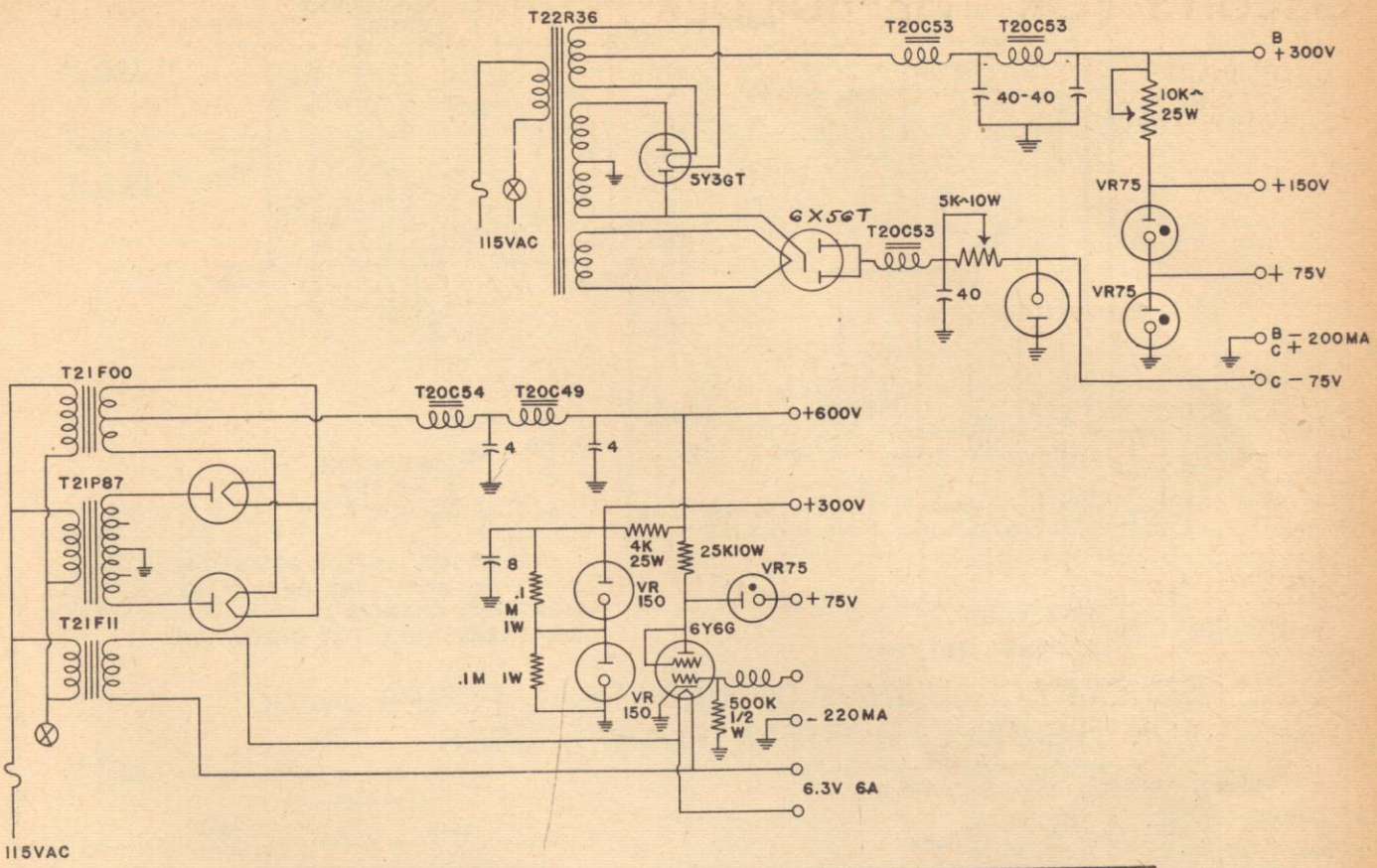


## DUAL VOLTAGE BRIDGE RECTIFIER

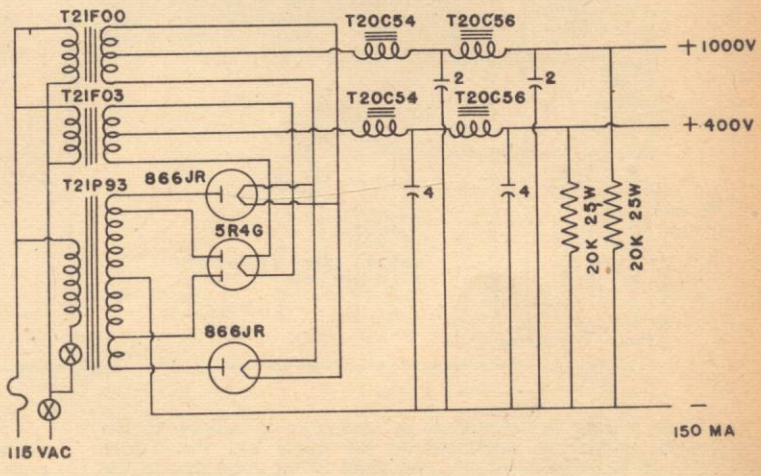


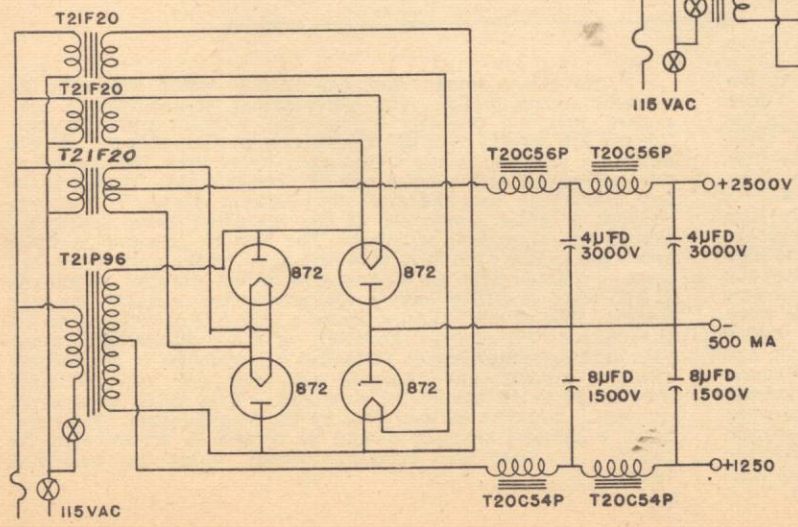

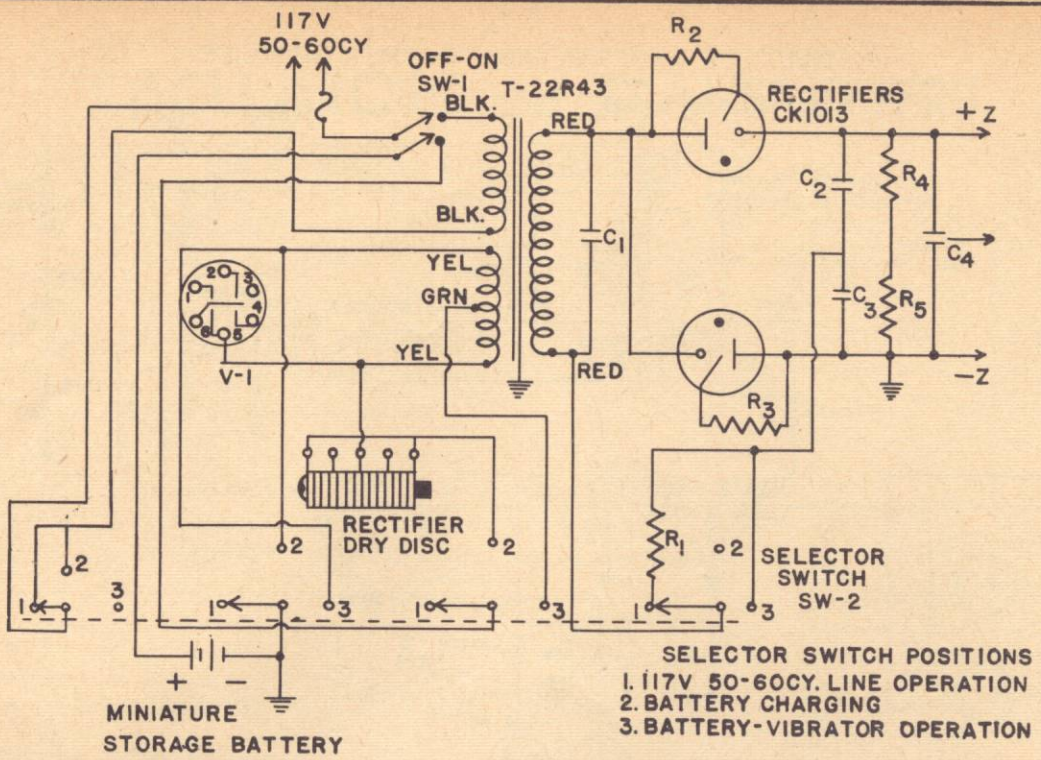


SCHEMATIC DIAGRAM OF UNIVERSAL POWER PACK FOR HIGH SPEED PHOTO-FLASH TUBES

115VAC OR 6VDC POWER SUPPLIES

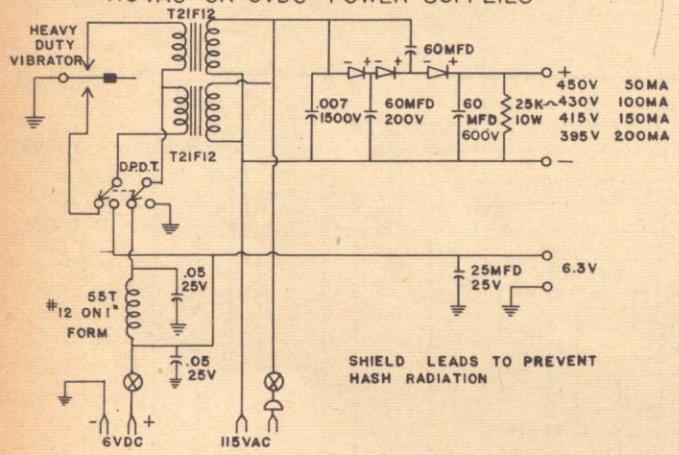


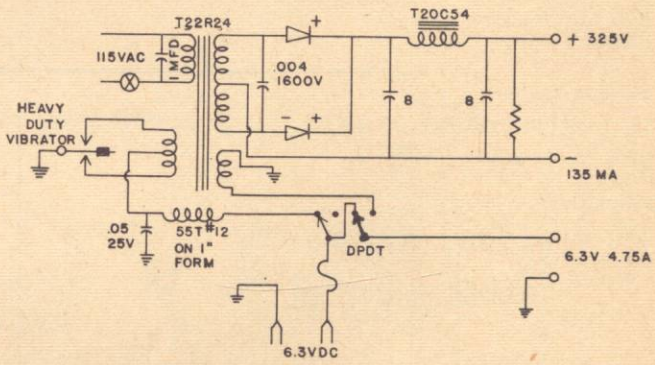


When wiring the circuit it is advisable to adhere to the component values as specified in the parts list if optimum performance is to be realized. All lead wires employed in the high voltage circuits should have adequate insulation to avoid break-down and circuit failure. The high voltage leads from the energy storage condense to the output connector should be at least #12 or #14 stranded wire, properly insulated. Make a good ground circuit connection to the metal chassis. Be sure that all component parts are securely mounted to prevent the possibility of their shifting and shorting out any portion of high voltage circuit. To wire the selector switch SW-2, employ one circuit of the first gang section for the high voltage secondary switching circuit. Use the second gang section for the three remaining lower voltage switching circuits. This switch arrangement effectively isolates the high voltage circuit and prevents a possible flash-over to the other circuit contacts. Wire the battery-vibrator circuit with at least #14 stranded insulated conductor of minimum lead length. Take care to make good solder joints and see that the battery circuit connections are clean and tight. These measures will keep the voltage drop in the primary circuit to a minimum so that the full high voltage charge will be developed in the storage condenser.

Use a six prong wafer type socket which will grip the vibrator prongs firmly. The conventional molded type of tube socket will not properly engage the vibrator pins as their lengths are shorter than the normal vacuum tube prongs. Do not employ a vibrator having a frequency lower than 180 cycles as this will result in a heavier battery current drain. Do not under any conditions use the pack on "battery-vibrator" operation without a buffer condenser of the specified value connected across the secondary winding. The battery charging rectifier specified in the parts list is a full-wave bridge unit which has been connected with its elements in series--parallel to provide a half-wave rectifier having characteristics suitable for this circuit. The circuit diagram shows a pictorial connection of the terminals of the modified rectifier. If a dry disc rectifier other than that specified in the parts list is employed in the battery charging circuit, the charging rate obtained into the fully discharged cells should be measured. This value should not exceed .8 amperes as specified by the manufacturer. If necessary, a limiting resistor should be placed in series with the rectifier to keep the charging current within the specified value.

## THORDARSON MATCHED HIGH VOLTAGE PLATE SUPPLIES

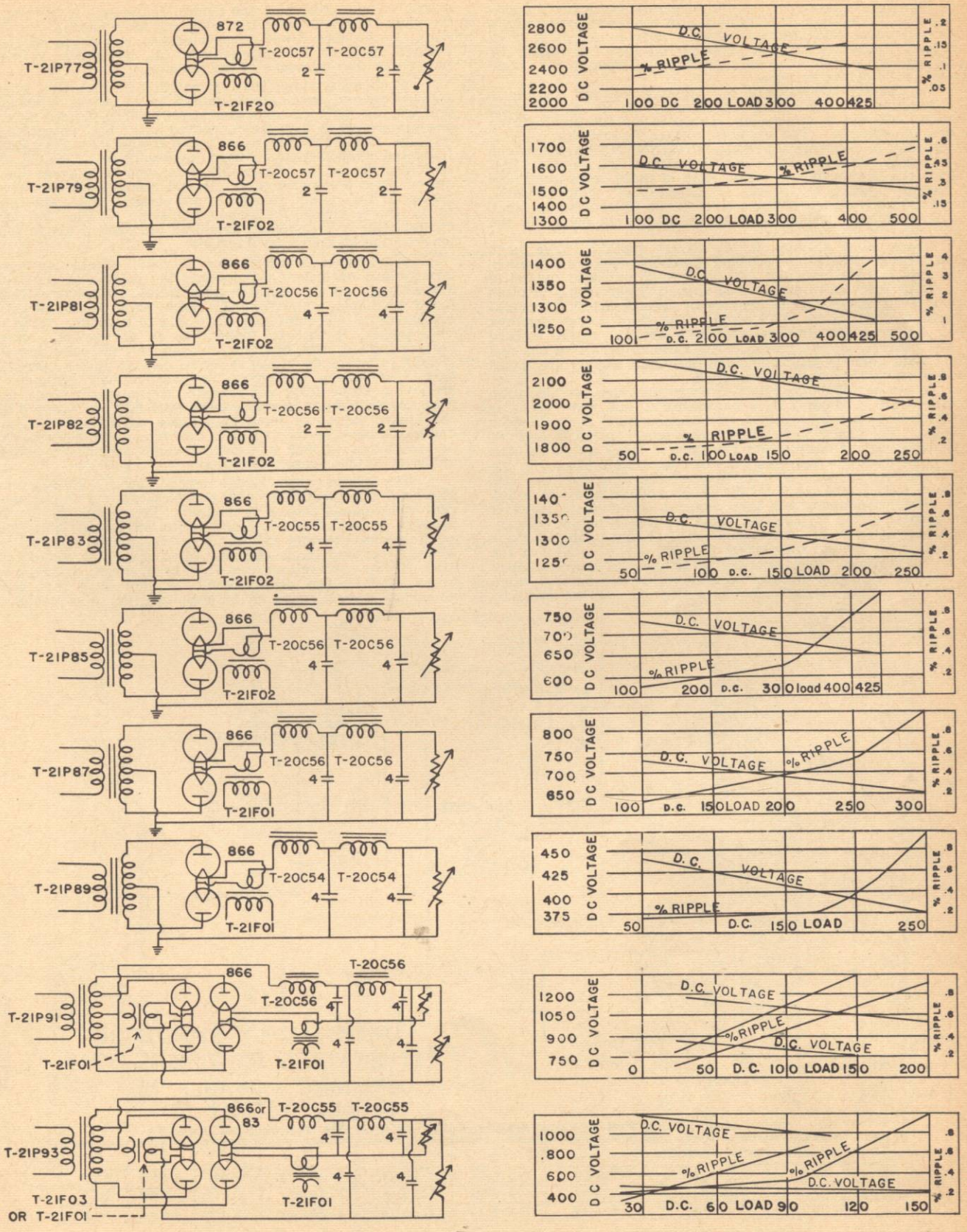


POTENTIOMETERS NOT IN CIRCUIT. USED TO INDICATE VARYING LOAD.

# VARIABLE D.C. SUPPLY EMPLOYING THYRATRON RECTIFIERS

The high voltage D. C. power supply shown in the schematic diagram finds its main application in amateur phone and CW transmitters and in laboratories where a variable source of D. C. voltage is frequently desired. This circuit does not require the usual primary variac or a voltage dropping resistor to obtain control of the output voltage.

In amateur transmitters the variable voltage feature is advantageous for tuning up operations, where a low plate potential will aid in preventing damage to the RF tubes during initial adjustments. The variable voltage feature also allows the operator to conveniently reduce power for local contacts and thus comply with the FCC communications act, section 324. "In all circumstances, except in case of radio communications or signals relating to vessels in distress, all radio stations, including those owned and operated by the United States, shall use the minimum amount of power necessary to carry out the communication desired."

Three high voltage D. C. Power supplies have been designed employing grid controlled rectifiers. One unit employs type FG-17 thyratrons and will deliver a maximum output of 1500 volts D. C. at .5 amps. The second power supply utilizes type 627 thyratrons and is capable of a maximum D. C. output voltage of 2500 volts at .5 amps. The third design employs R. C. A. type 2050 thyratrons and has a maximum output voltage of 400 volts D. C. at .2 amps. The various circuit values and transformer types required for each individual supply are listed directly below the schematic diagram.

Inspection of the circuit diagram reveals that two thyratron rectifiers are employed in a conventional full wave rectifier circuit. This is followed by a two section filter and a bleeder resistor. The phase shift bridge transformer, T-22R50, and its associated circuit components are used to apply an A. C. bias voltage of constant amplitude, but of controllable phase, to the thyratron tube grids. The shifting of the phase of the grid voltage controls the point on the anode voltage wave at which tube conduction starts and thus controls the average value of the rectified anode voltage and hence the supply output voltage. The phase angle of the grid voltage with respect to their anodes is controlled, in this circuit, by the resistance setting of the 50 K ohm rheostat. When employing a rheostat of this resistance the supply output voltage can be adjusted to any desired value within the voltage ranges shown in Fig. 1. At the maximum output voltage condition, the control resistance is minimum and the phase angle between the grids and their anodes approaches zero. To produce lower output voltages, the phase on the grid voltage is made to progressively lag the anode voltage by increasing the resistance of the rheostat.

When undertaking the construction of this type of power supply, several precautions should be observed. Adequately insulate the .25 mfd. condenser and all of the resistors from the chassis ground as they are connected in the high potential D. C. circuit. If the rheostat is to be controlled from the panel, an insulated shaft extension must be employed. The 50 K ohm resistors should be within 10% tolerance to prevent the load current from being unequally divided between the two rectifier tubes. If full output voltage is not obtained when the rheostat is in the minimum resistance position, reverse the primary connections of T-22R50 to establish the correct phase relation between the anode and grid circuit.

Transformer T-22R50 has a static shield between the primary and secondary to minimize the effects of line voltage disturbances on the rectifier grid circuit. However, it may be found advisable, which high RF fields exist, to connect a mica condenser of .001 mfd. from each grid to cathode. When using this supply, it will be found that as the output voltage is reduced, the amount of ripple voltage will increase due to the change in waveform of the rectified current pulses, which now flow over only a portion of the positive half cycles. When employing stock filter components, continuous voltage control from maximum down to zero cannot generally be obtained due to the higher values of input inductance required for continuous current flow as the tube firing is delayed. Instability may occur at one output voltage and current value somewhere below the minimum voltage ranges specified.

The phase shift bridge transformer, T-22R50, can be employed with other types of thyratron tubes and circuit application where phase control is desired. The secondary insulation is rated at 5000 volts test and sufficient voltage amplitude is available to provide smooth, positive, phase control of the average rectified anode current. When using this transformer in other circuit applications, the R, C or L values assigned to the phase shift bridge arms should be such that the maximum secondary current rating of .03 amp. will not be exceeded.

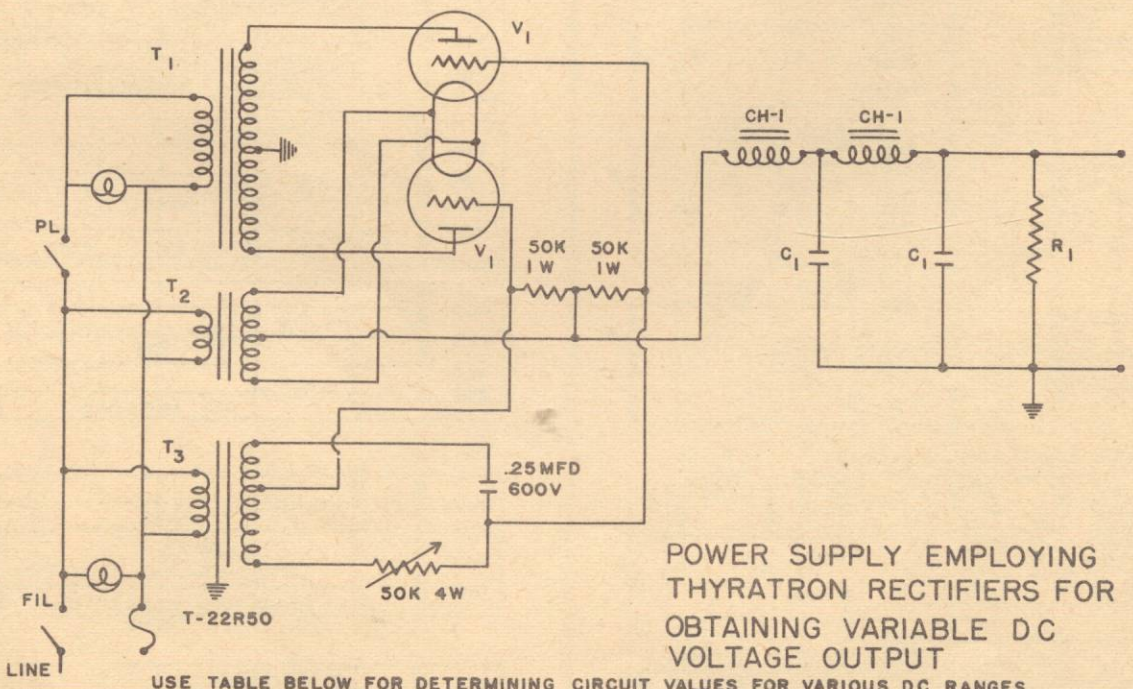


POWER SUPPLY EMPLOYING THYRATRON RECTIFIERS FOR OBTAINING VARIABLE DC VOLTAGE OUTPUT

USE TABLE BELOW FOR DETERMINING CIRCUIT VALUES FOR VARIOUS DC RANGES

| DC VOLTAGE | MAX CURRENT | $T_1$ | $T_2$ | $T_3$ | $CH_1$ | $V_1$ | $C_1$ | $R_1$ |
|---|---|---|---|---|---|---|---|---|
| 50-400V | 200 MA | T-21P89 | T-21F10 | T-22R50 | T-20C54 | 2050 | 8MFD | 20K |
| 500-1500V | 500 MA | T-21P79 | T-21F02 | T-22R50 | T-20C57 | FG 17 | 4MFD | 50K |
| 500-2500V | 500 MA | T-21P75 | T-21F02 | T-22R50 | T-20C57 | KU 627 | 4MFD | 75K |

NOTE: WHEN EMPLOYING THIS CIRUIT WITH TYPE 2050 THYRATONS, CONNECT THE SCREEN AND CATHODE OF EACH TUBE TO THE FILAMENT TRANSFORMER CENTERTAP. ($T_2$)

## SIX WATT AMPLIFIER

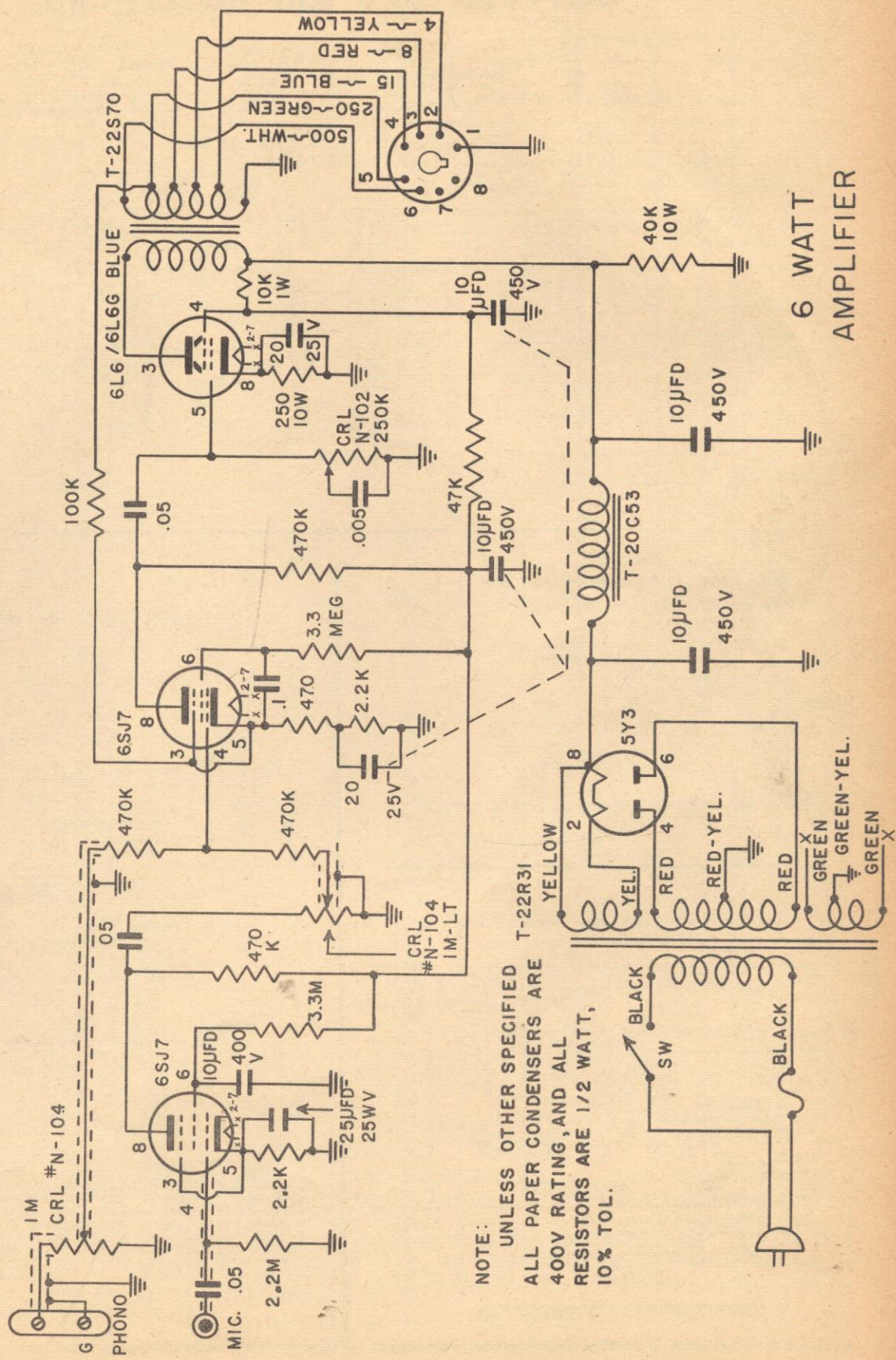


## TECHNICAL DATA

POWER OUTPUT: 6 WATTS
INPUT CIRCUITS: ONE HIGH IMPEDANCE MIC.
CHANNEL-115 DB. GAIN. ONE HIGH IMPEDANCE
PHONO CHANNEL-72 DB. GAIN. LOW
IMPEDANCE INPUT OPTIONAL.

OUTPUT IMPEDANCES: 4, 8, 15, 250, 500 OHMS.
FREQUENCY RESPONSE: FLAT WITHIN 1DB 50/10,000 CPS.
TONE CONTROL: ONE HIGH FREQUENCY ATTENUATOR
TYPE. MAXIMUM POSITION ATTENUATES 22DB AT
10,000 CPS.
HUM LEVEL: 60 DB BELOW RATED OUTPUT.
TUBE COMPLEMENT: 1-6SJ7; 1-6SJ7; 1-6L6; 1-5Y3G.
POWER CONSUMPTION: 70 WATTS, 110-120 VOLTS,
60 CYCLES.

NOTE:
UNLESS OTHER SPECIFIED
ALL PAPER CONDENSERS ARE
400V RATING, AND ALL
RESISTORS ARE 1/2 WATT,
10% TOL.

# CONVERTERS and RECEIVERS

ONE TUBE CONVERTER

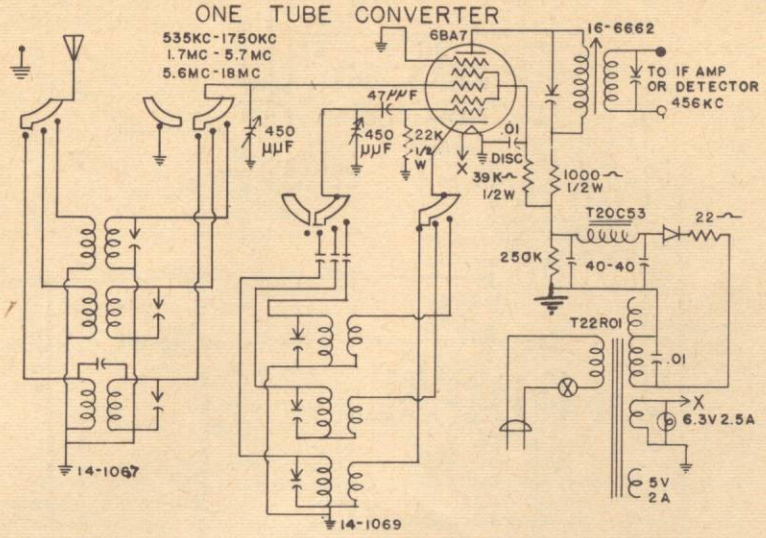


SIMPLE NOISE LIMITER FOR INSERTION ACROSS VOLUME CONTROL BETWEEN DIODE DETECTOR AUDIO INPUT

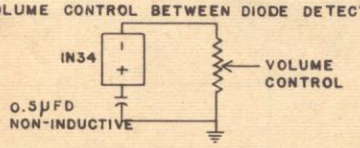


NOISE LIMITER

Radio and Television News, Aug. 1950. page 46.

SUPERREGENERATIVE RECEIVER

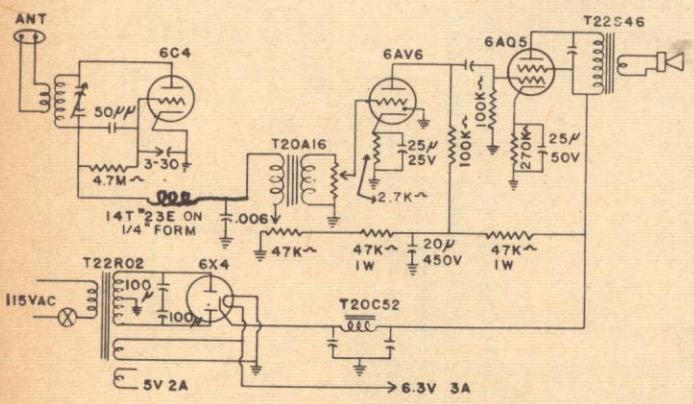


SUPERREGENERATE DETECTOR

Modified from the RCA Receiving Tube Manual, page 269.

PUSH - PULL RF AMPLIFIER

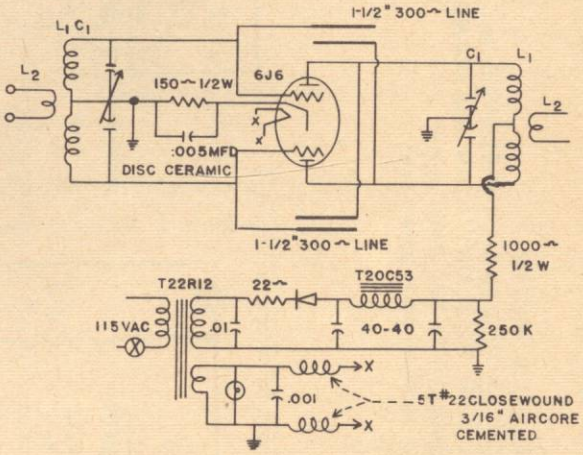


| BAND IN MC | $C_1$ BUTTERFLY | $L_1$ | $L_2$ |
|---|---|---|---|
| 144-146 | 5.3μμFD | 6T #18 ECT. 3/8" SPACE 3/8" AIRCORE | 4T #18 5/16" D |
| 50-54 | 11. μμFD | 10T #20 ECT. 1/2" SPACE 1/2" AIRCORE | 4T #28 7/16 D |
| 28-30 | 11 μμFD | 14T #20 ECT. 5/8" SPACE 5/8" AIRCORE | DITTO |

PUSH PULL RF AMPLIFIER

The Radio Amateurs Handbook, 1952. page 366.

## AM-FM IF STRIP WITH DETECTORS POWER SUPPLY

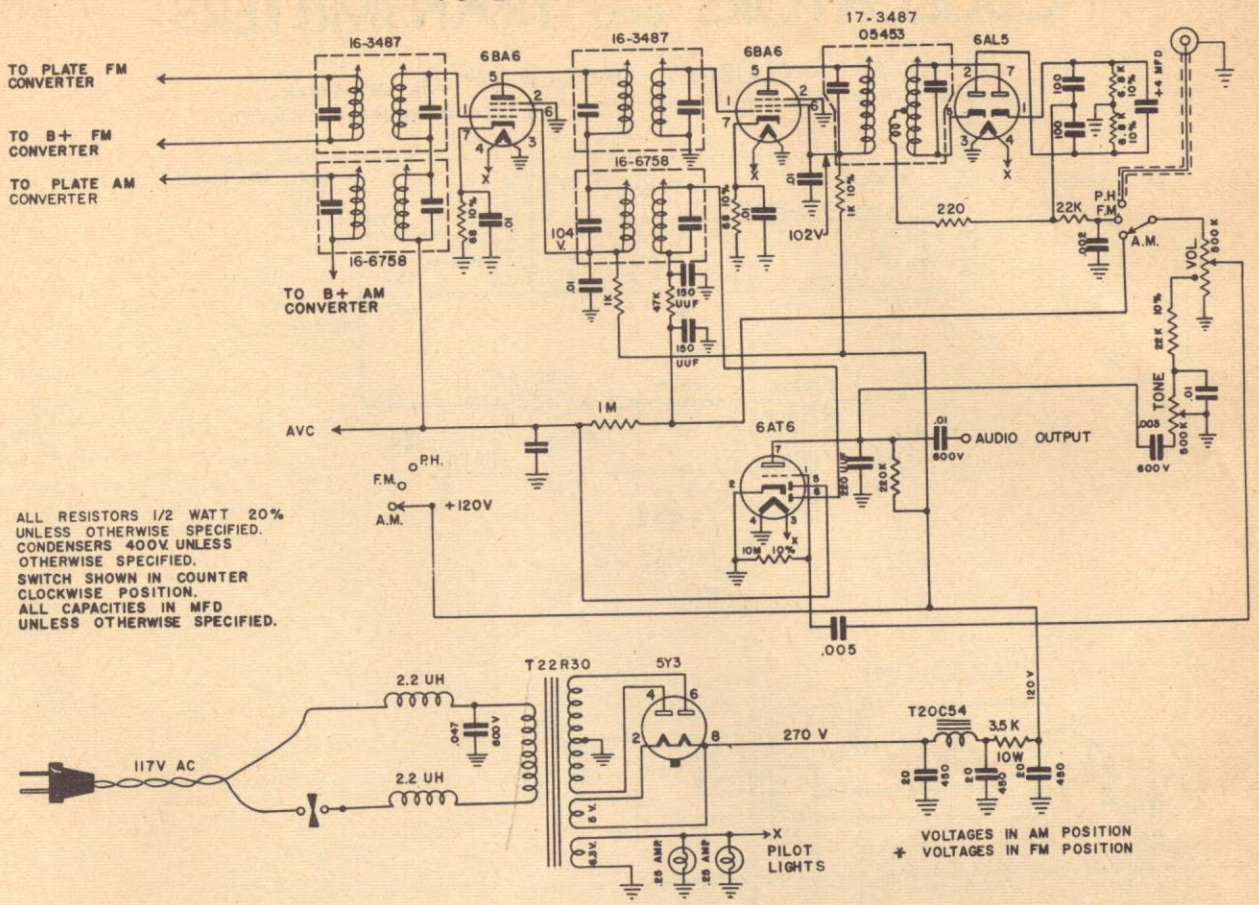


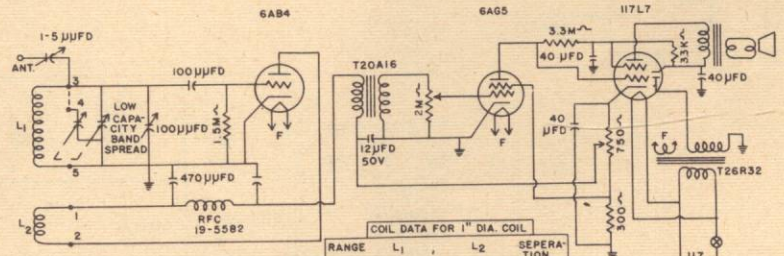


NOVICE REGENERATIVE CW RECEIVER

| COIL DATA FOR 1" DIA. COIL | | | |
|---|---|---|---|
| RANGE | $L_1$ | $L_2$ | SEPERATION |
| 2.8-6MC | 25T #26E CLOSEWOUND | 4T #26E CLOSEWOUND | 3/8" |
| 5.9-13.5 MC | 13-1/2T #22 E SPACED 5/8 | 1-1/4T #26E CLOSEWOUND | 1/4" |
| 13.6-30 MC | 5-1/2T #22E, SPACED 5/8" | 1-3/4T #26E CLOSEWOUND | 3/8" |
| 24.5-40 MC | 1-1/2T #22E CLOSEWOUND | 1-3/4T #26E CLOSEWOUND | 5/16" |

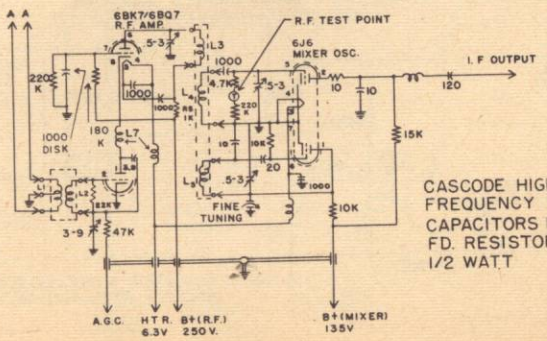


CASCODE HIGH FREQUENCY TUNER
CAPACITORS IN μμ FD. RESISTORS 1/2 WATT

# OSCILLATORS and TRANSMITTERS

## BEAT FREQUENCY OSCILLATOR

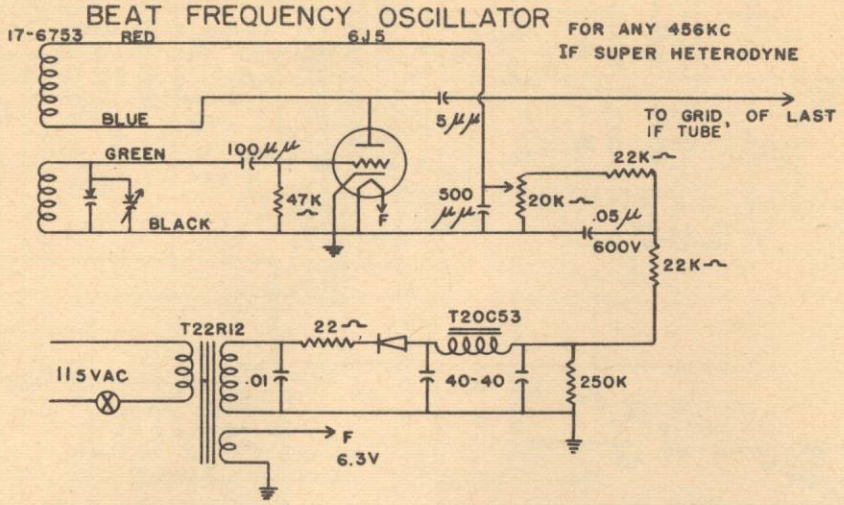


## CODE OSCILLATOR

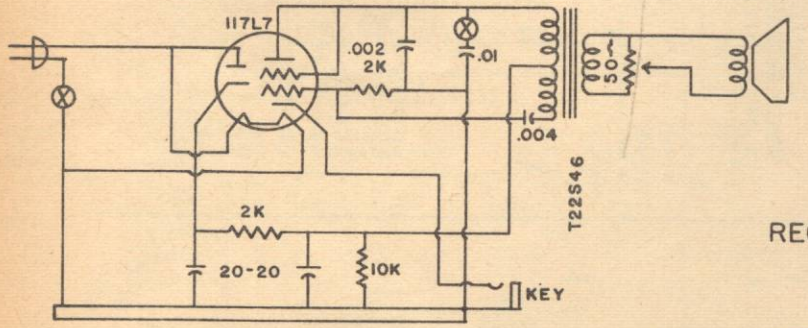


## RECEIVER FREQUENCY STANDARD

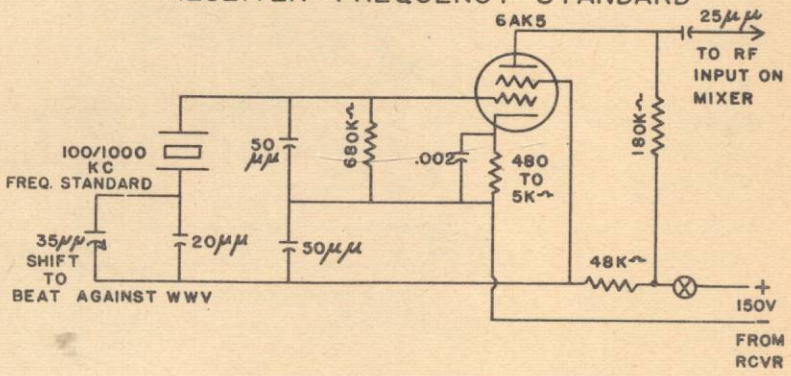


## "SQUELCH" OR "CODAN" INTER CARRIER SILENCER

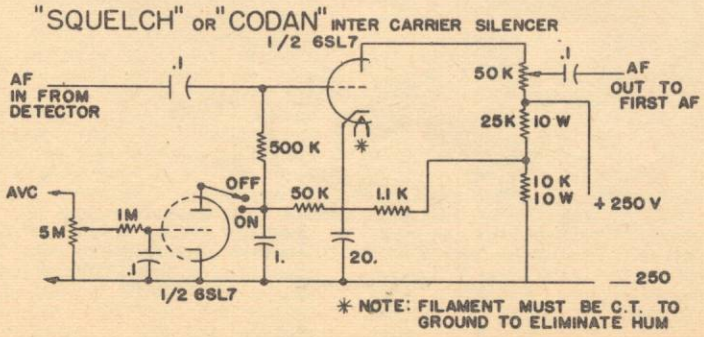

## SERIES TUNED COLPITTS (CLAPP) OSCILLATOR

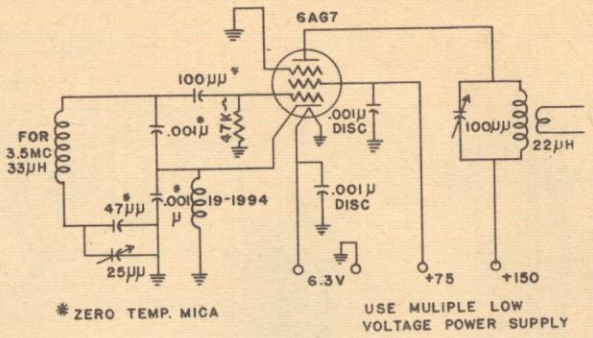


## 100-1000WATT SCREEN MODULATOR

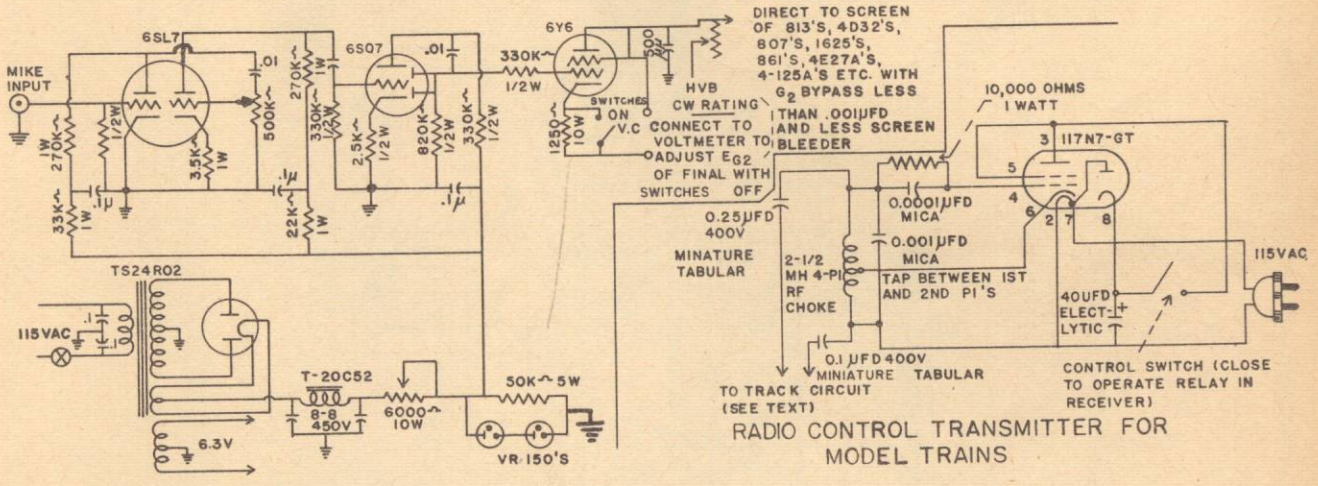


RADIO CONTROL TRANSMITTER FOR MODEL TRAINS

## ONE TUBE AC TRANSMITTER

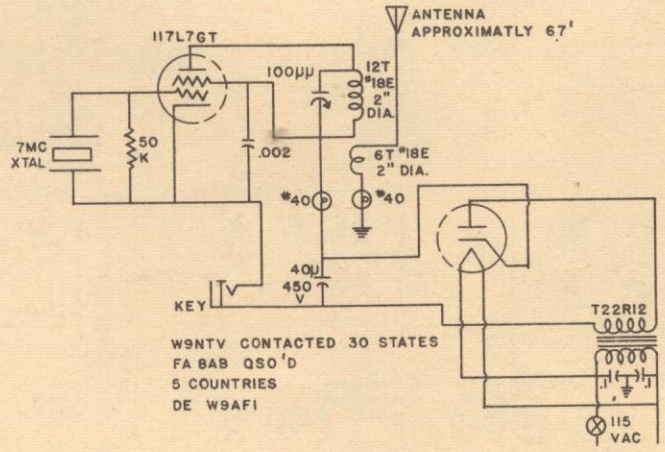


COLPITTS OSCILLATOR: Modified from The Radio Amateurs Handbook, 1952, page 133.
SCREEN MODULATOR: Modified from Radio and Television News, Sept. 1950. page 38.
RADIO CONTROL TRANSMITTER: Modified from Electronic Shortcuts for Hibbyists, page 23.

## LINEAR AMPLIFIER FOR LOW LEVEL MODULATION OR SINGLE SIDE BAND

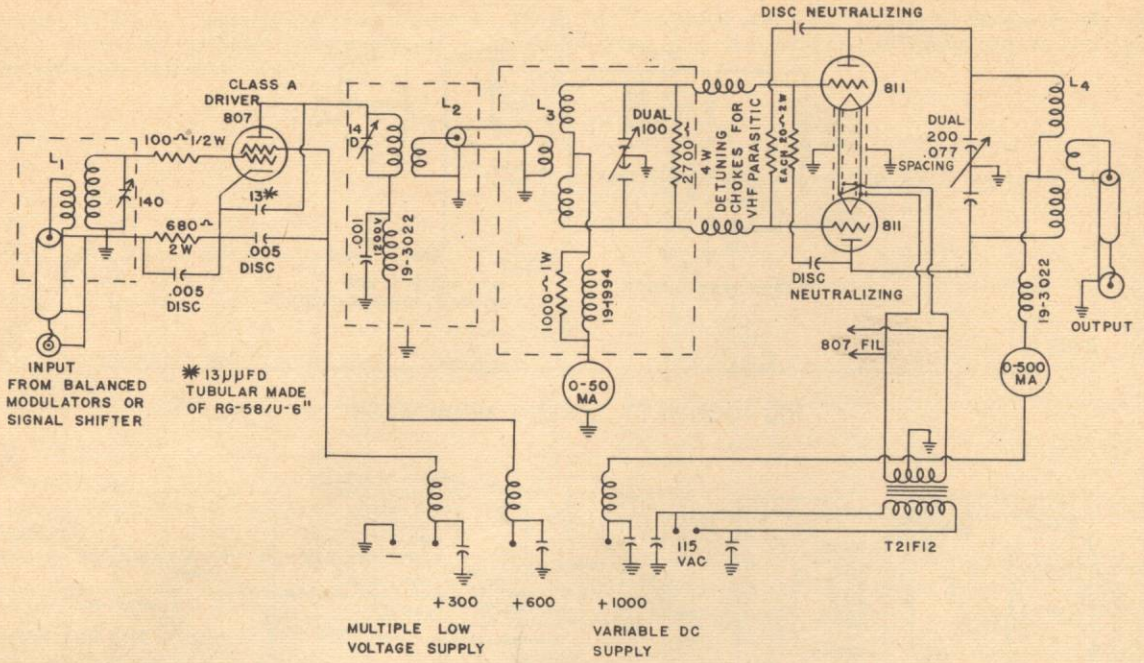


| BAND | TURNS | WIRE SIZE | DIA | LENGTH | UH | LINK | SPACE |
|---|---|---|---|---|---|---|---|
| $L_1$ | | | | | | | |
| 3.9 | 22-1/2 | 20E | 1 | 3/4 | 10 | 4 | 1/16 |
| 14 | 10-1/2 | 20E | 1 | 3/4 | 2.5 | 3 | 1/16 |
| $L_2$ | | | | | | | |
| 3.9 | 25 | 20E | 1 | 7/8 | 11.2 | 4 | 1/16 |
| 14 | 11 | 20E | 1 | 3/4 | 2.5 | 3 | 1/8 |
| $L_3$ | | | | | | | |
| 3.9 | 22 | 22E | 1-1/4 | 1-1/4 | 9.4 | 6 | ADJ. |
| 14 | 12 | 18E | 1-1/4 | 1-1/8 | 3.3 | 4 | ADJ. |
| $L_4$ | | | | | | | |
| 3.9 | 22 | 16E | 2-1/2 | 2-1/4 | 20 | 3 | ADJ. |
| 14 | 8 | 0.15 TUBE | 2-1/2 | 3-3/4 | 2.3 | 3 | ADJ. |

## 50 WATTS OUTPUT ON TEN & 6

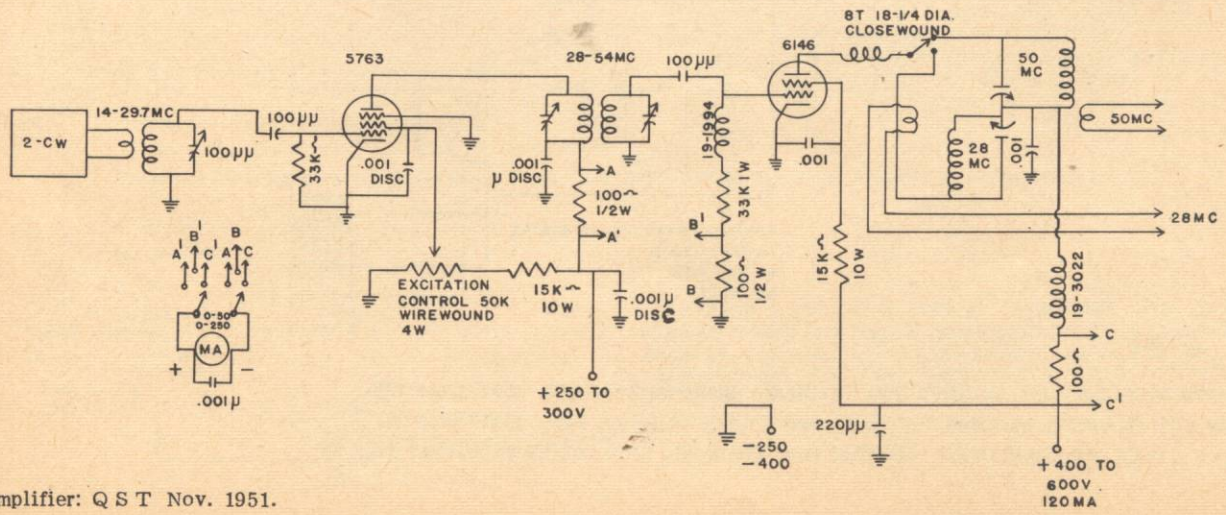


Linear Amplifier: Q S T Nov. 1951.

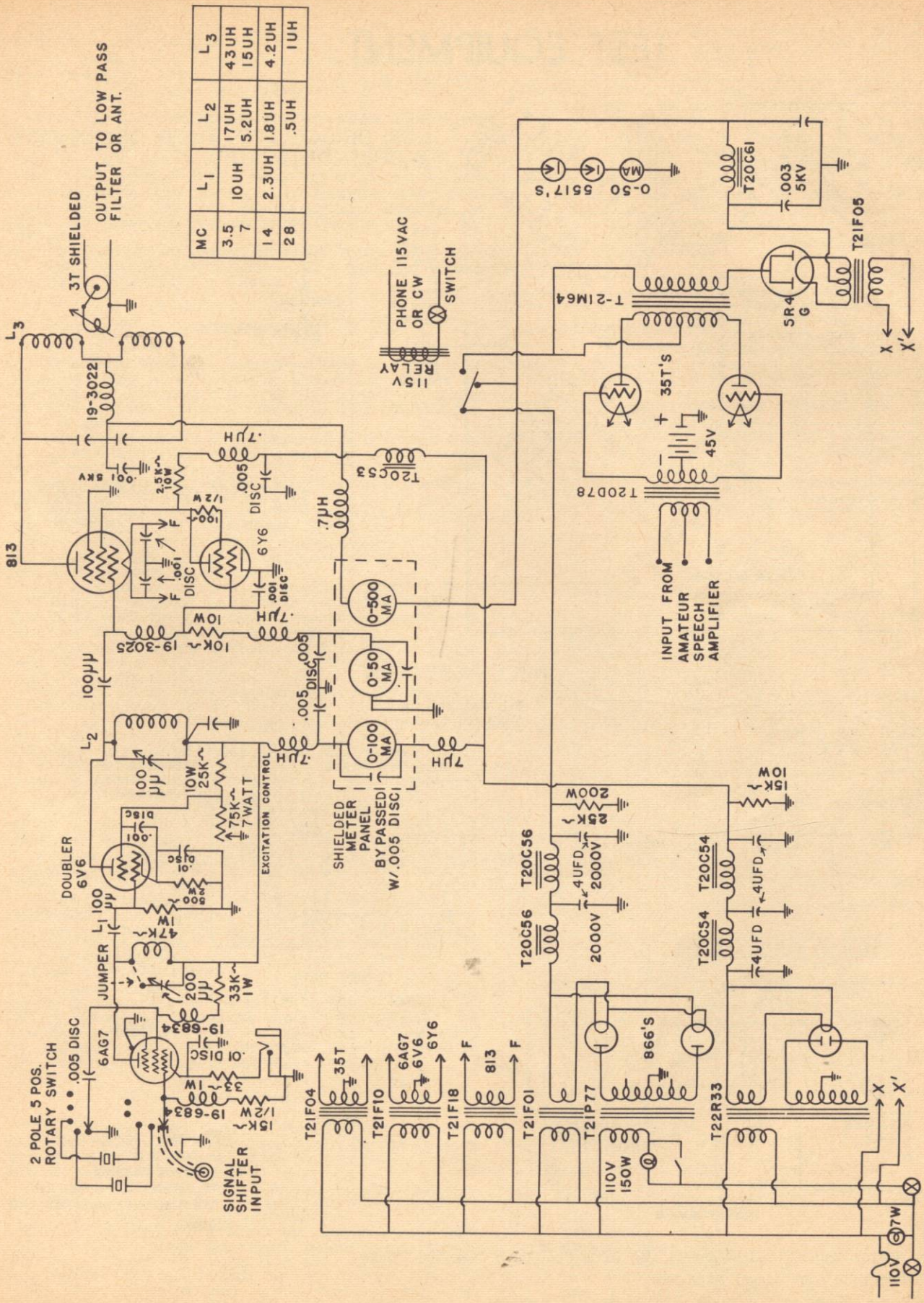


COMPLETE MEDIUM POWER PHONE OR CW TRANSMITTER AND MODULATOR WITH SPLATTER SUPPRESSION

# TEST EQUIPMENT

## LCR BRIDGE FOR AUDIO OSCILLATOR & NULL DETECTOR

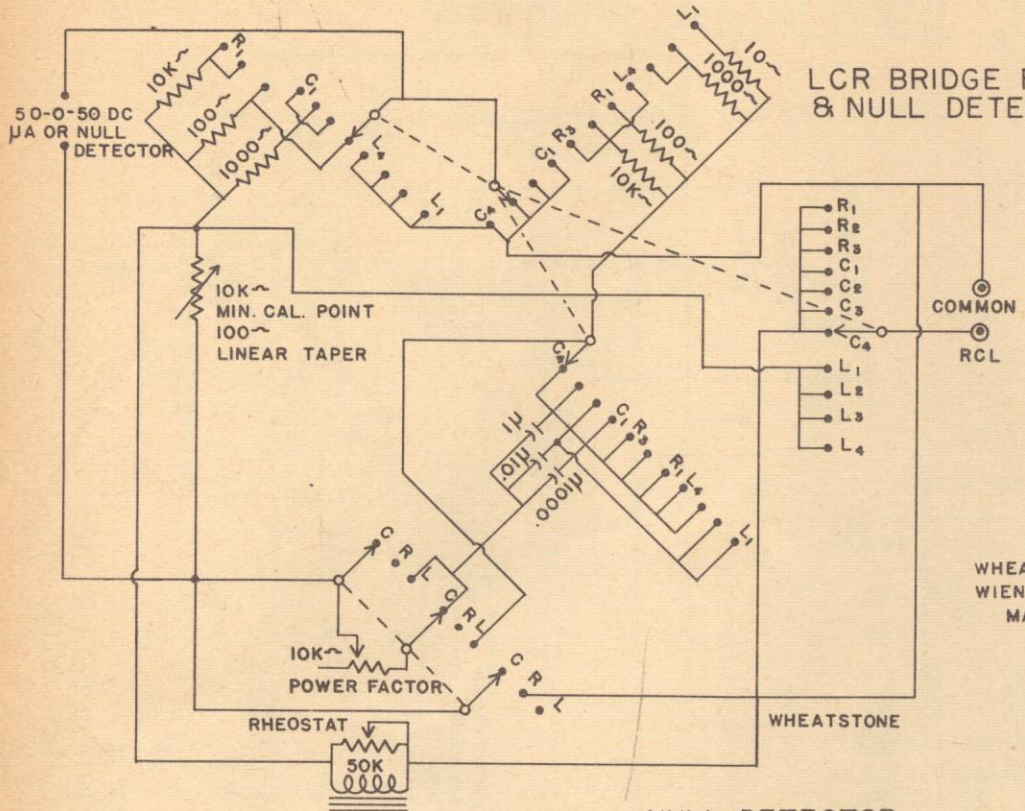


WHEATSTONE MEASURES 1~ – 1 MEG
WIEN " " 10μμ–100μFD
MAXWELL " " 10μH–100 HY.

## NULL DETECTOR

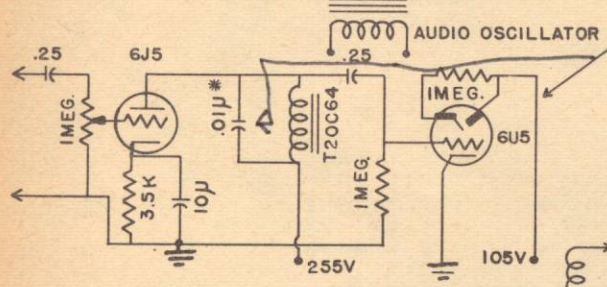


* .01μ FOR 400 CY.
.0025 FOR 1000 CY..

## GRID DIP OSCILLATOR

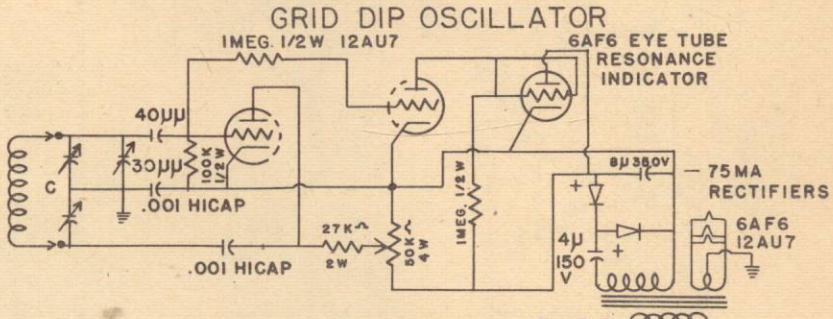


## AUDIO OSCILLATOR

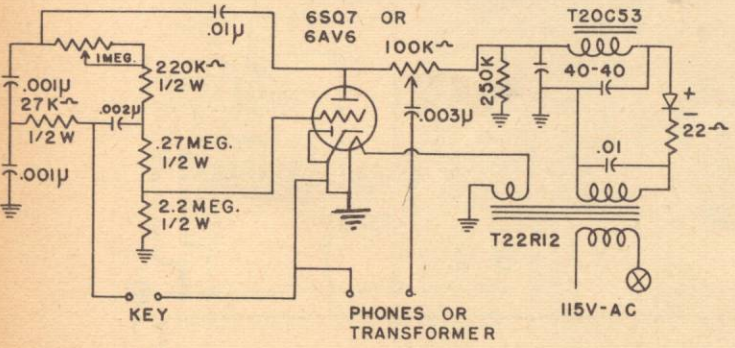


L-COIL DATA

| FREQ | WIRE | TURNS | SIZE |
|---|---|---|---|
| 1-2 | 36 | 210 | 3/4 CLOSE |
| 2-4 | 32 | 95 | " " |
| 4-8 | 26 | 40 | " " |
| 8-16 | 22 | 24 | " OVER 1" |
| 16-32 | 18 | 8-1/2 | " CLOSE |
| 32-64 | 18 | 3-1/2 | " OVER 1/2 |
| 64- | 12 | 1 | " |

C-MIDGET 420μμ/162μμ MODIFIED BY REMOVING 6 ROTOR PLATES & TRIMMERS FROM 420μμ SECTION WITH CALIBRATING DIAL

LCR Bridge: Turner, Radio Test Instruments, Ziff Davis Publishing Company, Chicago.
Audio Oscillator: RCA Tube Manual, page 280.
Grid Dip Oscillator: Radio and Television News, July 1950, page 58.

## VACUUM TUBE VOLTMETER

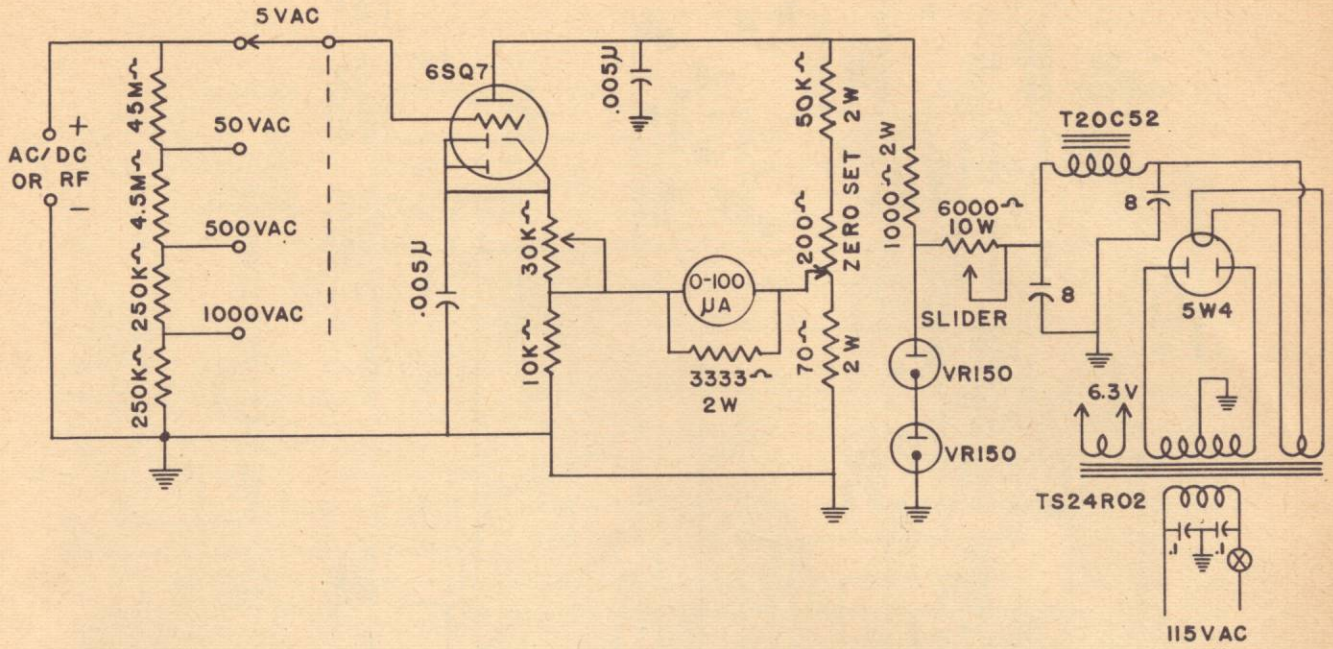


SQUARE WAVE GENERATOR

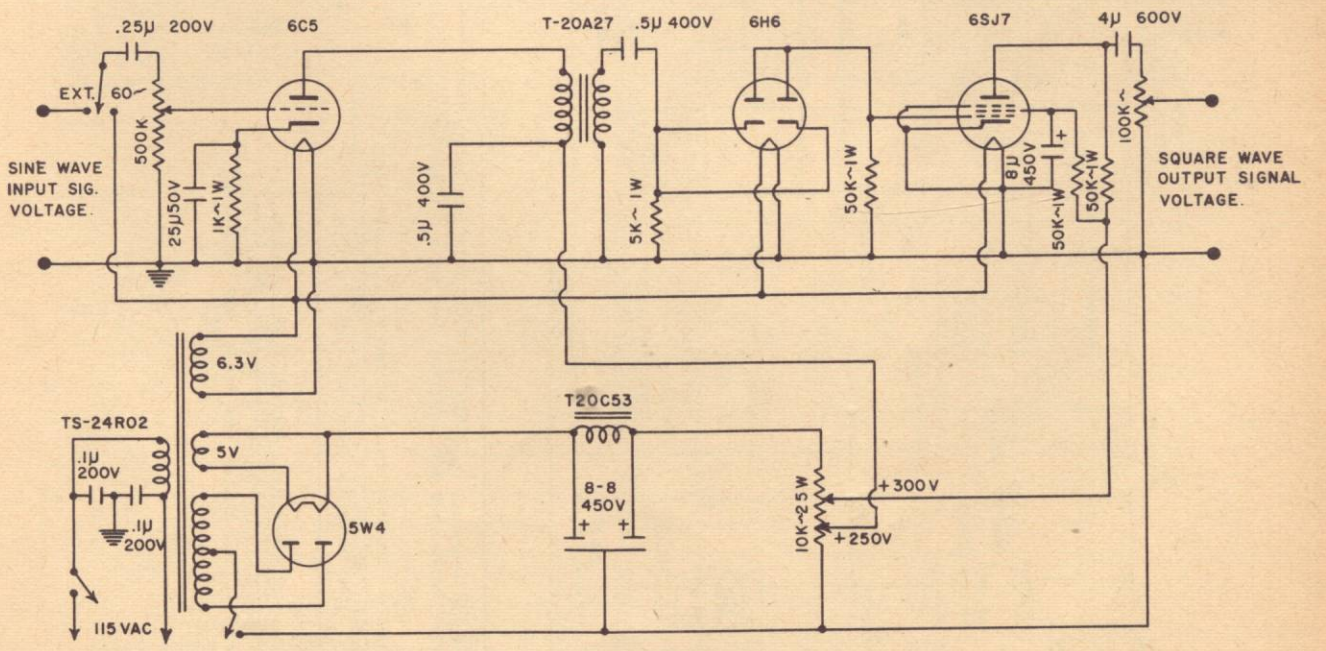


Vacuum Tube Voltmeter: Turner Op. Cit. page 38.

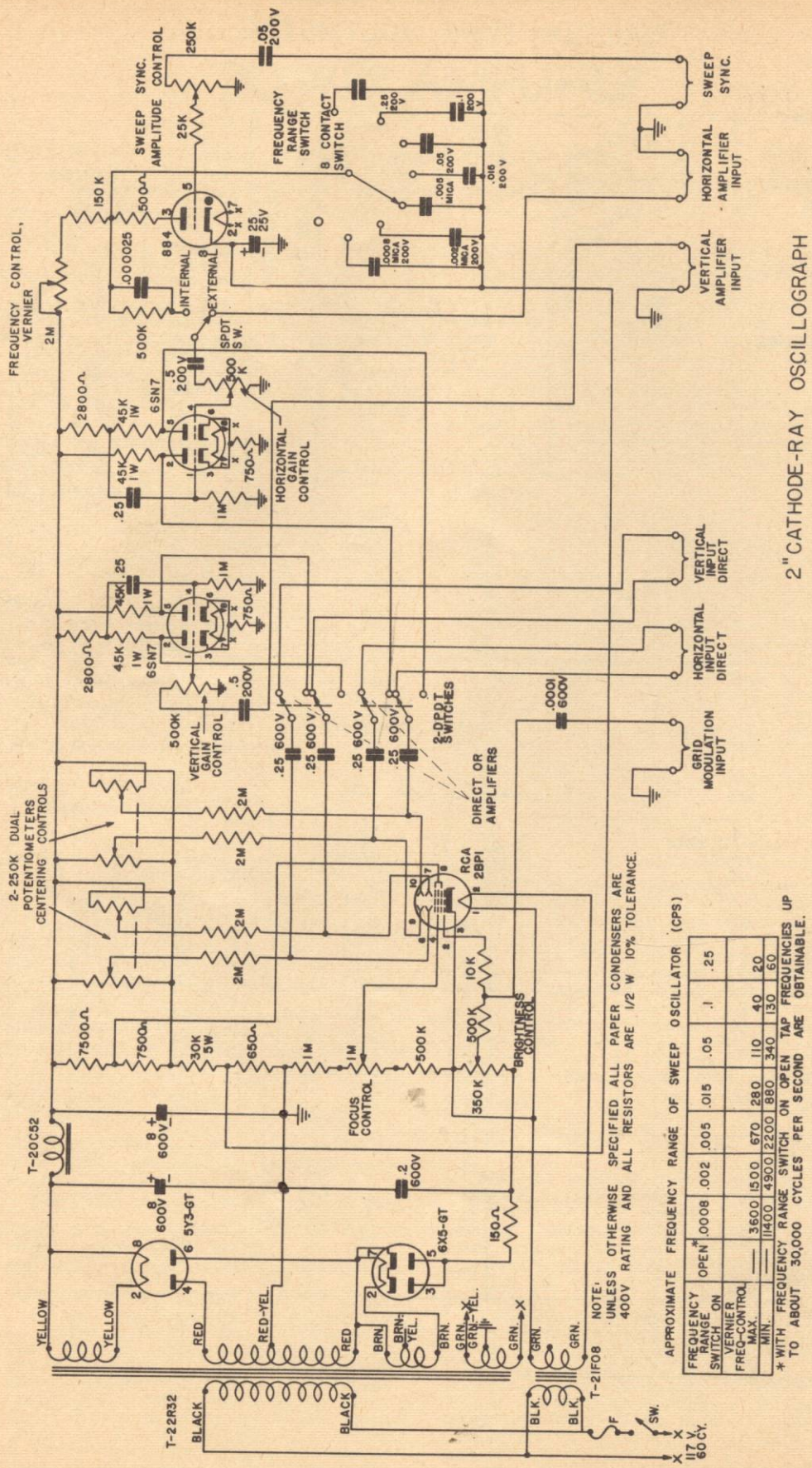


2" CATHODE-RAY OSCILLOGRAPH

# MISCELLANEOUS CIRCUITS

ELECTRONIC METRONOME

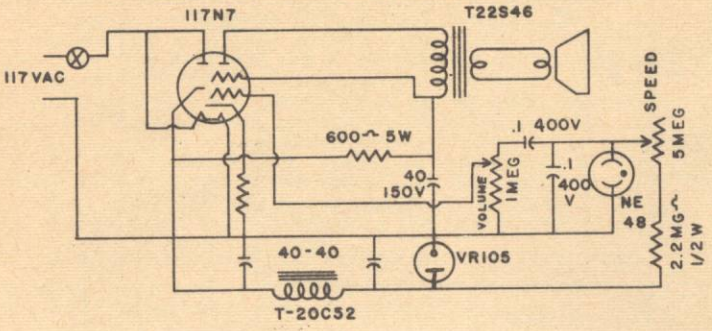


#930

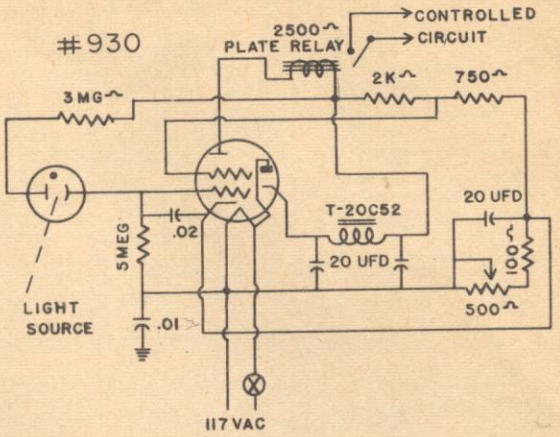


PHOTO CELL RELAY

BLINKING LIGHTS

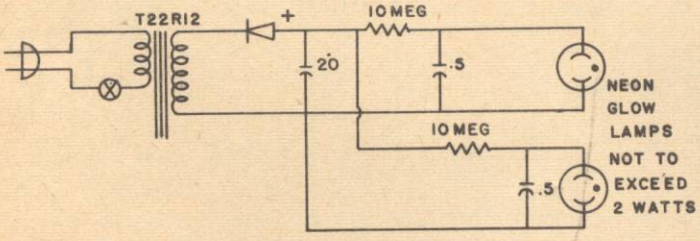


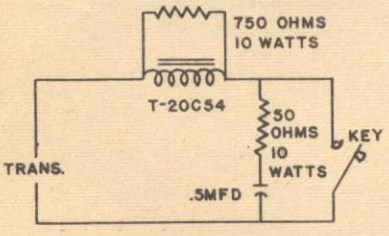


KEY CLICK FILTER

The filter shown in the figure will eliminate clicks provided that the keyed current is not greater than 200 ma. The 750 ohm resistor across the T20C59 is correct only for this particular choke: a choke of higher inductance will require a lower value of resistor, and a choke of lower inductance requires a higher value or no resistor whatever. If the cathode circuit is keyed, the voltage rating of the .5 Mfd condenser should be equal to or greater than the plate voltage of the keyed stage. The 50 ohm resistor prevents the .5 Mfd condenser from discharging through the key contacts so rapidly that sparking results. For best results we recommend the use of the above filter with the Multi-Band transmitter.

FM LIMITER-DETECTOR CIRCUIT

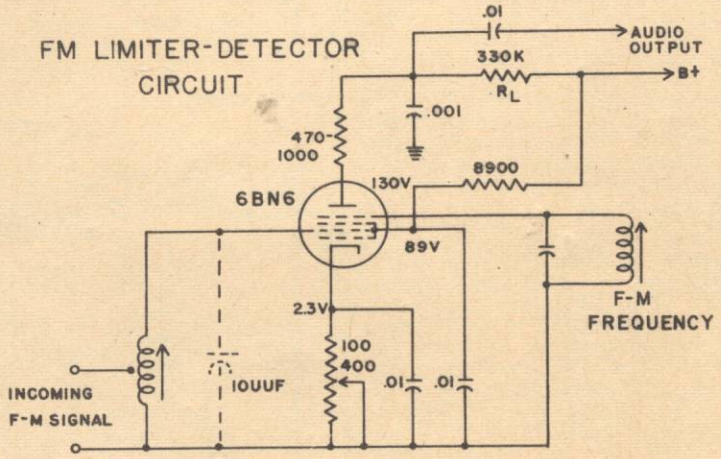


Photo Cell Relay: GE CR 7505K128.

Electronic Metronome: Radio and Television News, May 1950, page 45.

Blinking Lamp Novelty: Radio and Television News, February 1952, page 102.

## CARRIER CURRENT TRANSCEIVER

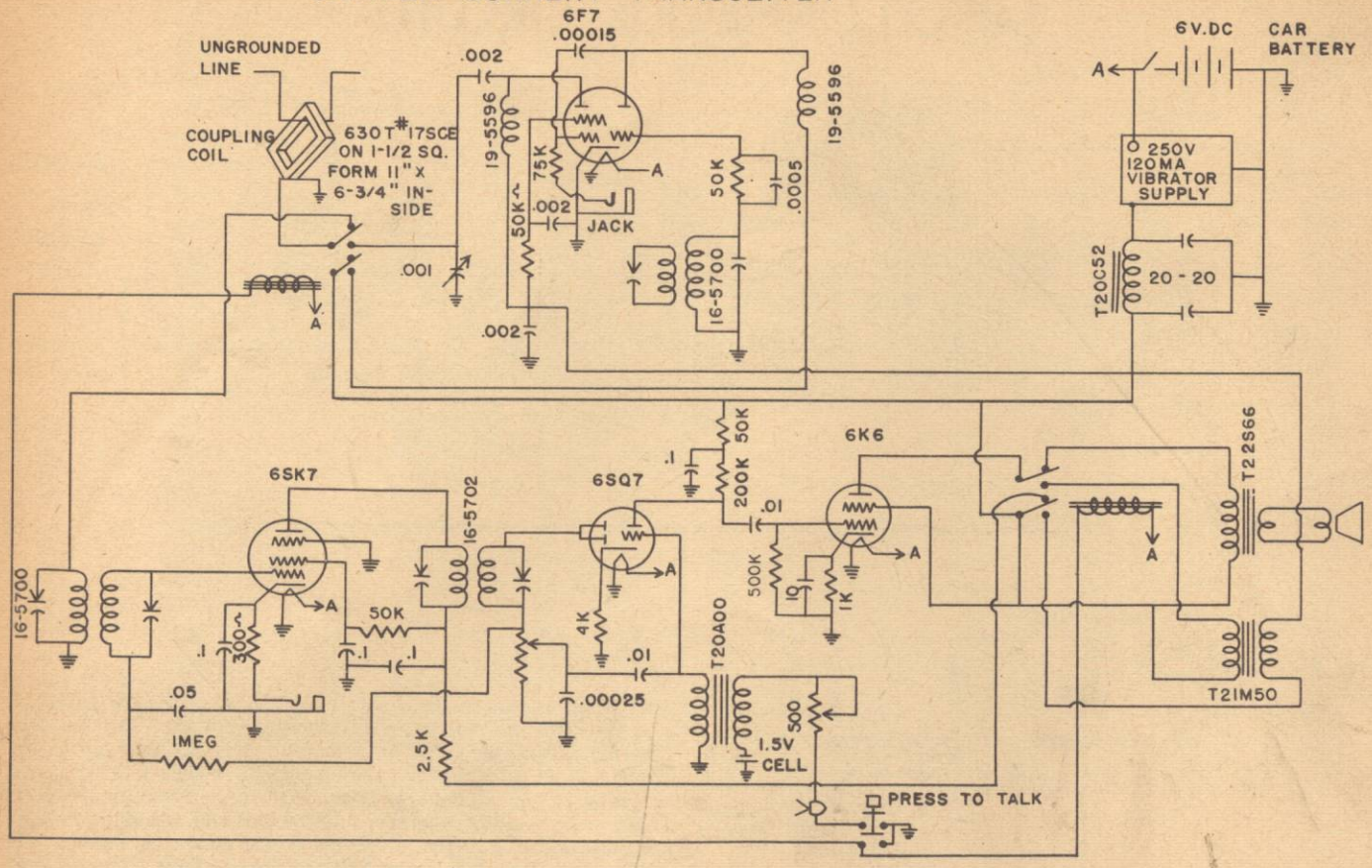


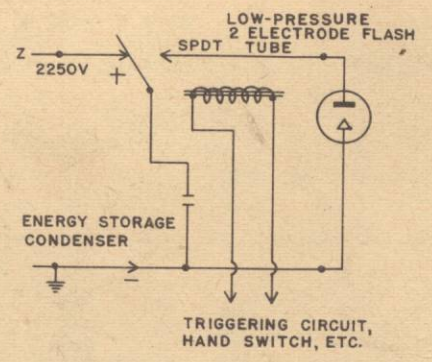


FIRING CIRCUIT FOR LOW-PRESSURE FLASH TUBES

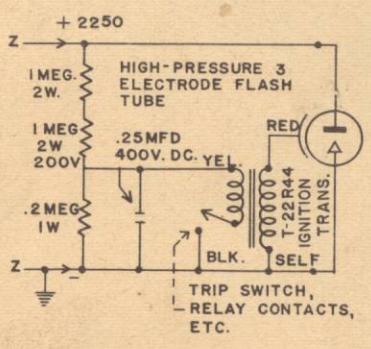


BASIC FIRING CIRCUIT FOR HIGH-PRESSURE FLASH TUBES WHICH REQUIRE A SEPARATE IONIZING POTENTIAL.

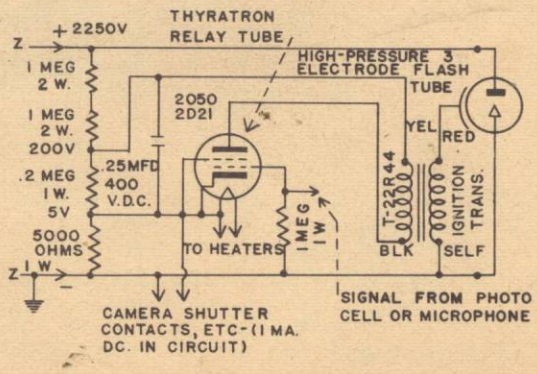


IMPROVED FIRING CIRCUIT USING THYRATRON RELAY TUBE TO CONTROL IONIZING POTENTIAL

# Meissner

Signal

## De „TVI" ing

Shifter

## Radio Transmitters

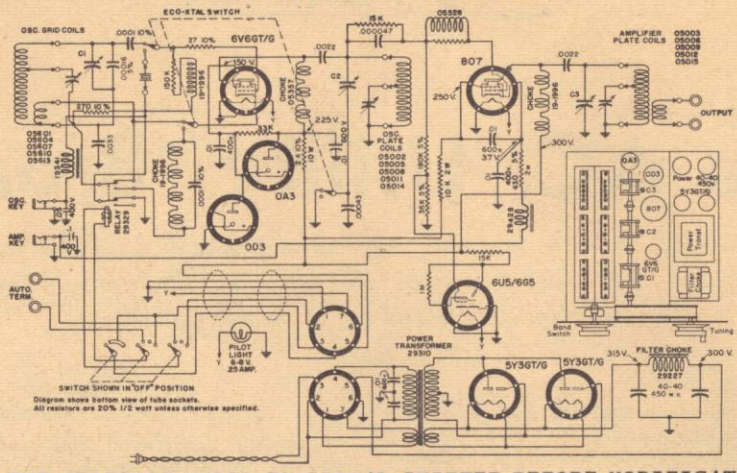


*THE MEISSNER MODEL EX SIGNAL SHIFTER BEFORE MODIFICATION*

Simple logic tells us that television interference from amateur radio gear should be stopped at its source for the sake of efficiency. Realizing that even then radiation on the desired frequency, but from the gear itself instead of the antenna, is undesirable; the second step in eleminating television interference is shielding.

In radio transmitters the following sources of trouble are evident:

1. Harmonics
2. Parasitic Oscillations
3. Audio Splatter
4. Generation of the fundamental at a low frequency and multiplying for output (resulting in interference to television receivers IF frequencies.)

Harmonics can be suppressed with tuned circuits--harmonic traps, etc., careful circuit design, and use of proper operating conditions. When de "TVI" ing the Meissner Signal Shifter harmonics are often cured by connecting a 5 or 10 mmfd ceramic capacitor from the plate to ground at the 6V6 tube and from the control grid and screen grid to ground. This same method of by-passing is applicable to the 807. When capacity is added the Signal Shifter should be re-aligned. Harmonic traps placed in the 807 plate circuit should resonate at the frequency of the harmonic to be suppressed. TVI traps usually consist of a 25-50 mmfd midget variable condenser and from 3 to 6 turns, ½ inch diameter inductance. When the inductance is adjusted so that the trap resonates at about half condensor capacity--with a grid dip meter--it may be further adjusted on the air with a TV picture to set minimum interference.

Parasitic Oscillations usually result from poor construction or workmanship and faulty design. Cure of parasitics in the Meissner Signal Shifter usually can be had by changing the position of parts and by redressing the leads. The following may be helpful.

1. Keep the R. F. Chokes in the 6V6 circuits as far part as possible.
2. Be sure the relay contacts are clean and are making good contact.
3. Check alignment carefully.
4. Keep leads close to chassis.
5. Keep grid and plate leads separated as far as possible.
6. Move the condensers on the 807 socket. Push these condensors down as close as possible to the socket.
7. Keep all condensers ground leads very short (Disc ceramic condenser used as by-passes become series resonant in the TV range--and thus are advisable in power supply leads.)
8. Add a VHF Wave trap in the plate circuit of the 807. This should be fastened on to the cap of the tube.

Audio splatter or spurious side bands caused by over modulation of AM can be suppressed by inserting a splatter choke (Thordarson T-20C60, T-20C61, or T-20C62) network in the secondary of the modulation transformer.

The only cure at the transmitter for interference caused by the generation of the fundamental at a low frequency and then multiplying for output--is to generate a higher initial frequency. This decreases the number of multiplying stages, and cuts down the possibility of IF interference.

The following design changes are advisable in the Meissner Signal Shifter.

1. At the point where the final tubes plate choke connects to the B+ line, by-pass with a 0.001 microfarad disc ceramic condenser. A disc ceramic is recommended because it is series resonant in the TV range.
2. Unwind the output coil on the amplifier's plate form, counting the number of turns and noticing the direction of winding. Insulate the plate coil with several layers of Duco cement or any Polystyrene liquid insulation. Solder a small stranded wire to a copper, brass or silver ribbon the width of the antenna coil and long enough to wrap around the plate coil without touching itself. Wrap this shield around the plate coil, covering it with several layers of insulating cement as the plate coil was covered. Complete this shielded coil by rewinding the turns that were removed, back on the amplifier's plate coil form and connecting as before.

Replace the 300 ohm line with coax, ie: RG-6/u, RG-21/u, RG-54A/u, RG-59/u when the turns of the link have been decreased; or a shielded 300 ohm twin lead when the turns have not been changed.

This latter step is a shielding step. Shielding of any transmitter is composed of three factors:

1. Shielding the transmitter from radiating any frequency.
2. Shielding the line voltage from radiating any frequency.
3. Shielding the Antenna line from radiating any frequency except at the antenna. This includes filtering to cut down undesirable radiation.

Shielding the Meissner Signal Shifter is best accomplished by inclosing the entire chassis, 6U5/6G5, and dials within a copper screen shield behind the panel which can be opened only at the top for changing tubes, but which can be removed by removing the panel and chassis from the cabinet. To do this on factory wired models it will be necessary to drill out the rivets holding the mounting brackets on the panel and replacing them with 6-32 machine screws (the kit model uses machine screws.) Care should be taken when shielding with copper screen to solder all panels to prevent slot radiation. Slot radiation is evident from the cabinet in the present model. Where the screen is held together, other than where it is soldered, a 6-32 HEX nut soldered to the underside of a puddled solder spot on the inside fold of the screen will sufficiently hold the screened shield when a 6-32 machine screw goes through a hole which lies within a puddled solder spot on the outside fold. These two puddled solder spots make a compression contact when the screw is tightened. A double folded joint will assist in holding up R. F. leaks.

Shielding the power leads is readily accomplished by inserting a Meissner line filter No. 15-7515 for transmitters of less than 300 watt rating. The filter should be mounted on the transmitter. In addition to this filter, two disc type .01 MFD condensers should be connected inside the chassis between the line and a common ground.

Thus, the Meissner Signal Shifter may be de "TVI" ed by shielding the link for harmonic radiation; by-passing the tubes for parasitics and harmonics; and screening the transmitter line and the R. F. to the Antenna or the next stage.

A low pass filter installed in the coaxial line feeding the antenna from the final amplifier, or antenna coupler will provide antennuation of harmonics on the antenna. A properly designed low pass filter will not introduce appreciable power loss at the fundamental frequency if the coaxial line has a low standing wave ratio (1.5 to 1 or less.)

COMPLETE INSTRUCTIONS
FOR CONSTRUCTION AND OPERATION OF THE

Meissner

# 7-tube AC "Utility" Broadcast

*This receiver is presented in this manual only as a general guide in receiver construction. The essential parts which are available from Meissner or Thordarson for receivers of similar construction are noted by * in the parts list.*

The Meissner No. 10-1103 receiver kit was designed to answer the requirements for a simple 110-volt 60-cycle receiver of excellent performance in the broadcast range.

It utilizes one stage of Radio Frequency Amplification in combination with two high-gain (iron-core) I. F. transformers, giving excellent selectivity and sensitivity over its entire tuning range.

The receiver has conventional AVC obtained from a diode second-detector, and is provided with manual volume control and tone control.

Its full vision 7-inch slide-rule three-color dial, rear illuminated, is very attractive whether installed in an already existing cabinet, or installed in the steel cabinet with front panel, finished in black crackled lacquer, which is available to those who desire a special cabinet for the receiver.

A "Magic Eye" Cathode Ray tuning indicator, socket, cable and escutcheon are provided as standard equipment.

The accessories required are tubes as listed in the parts list, and a dynamic speaker having a 1500 to 2000 ohm field and output transformer to match a single 6V6 tube.

## ASSEMBLY

As the kit is unpacked, all parts should be carefully checked against the Parts List on back of this folder. Any discrepancies should be reported at once to the supplier from whom the kit was purchased.

The parts should be mounted on the chassis in accordance with the top view of the receiver shown on the Schematic Diagram, and the bottom view shown in the Pictorial Wiring Diagram.

Before beginning the wiring, temporarily install the gang condenser, dial and both controls so that their proper shaft lengths may be determined when the receiver is placed in the cabinet intended for it. Mark the shafts for proper lengths and then remove the controls from the chassis and saw each one with its shaft clamped in a vise. It is advisable not to attempt to cut the shaft of any unit while mounted on the chassis, because the heavy strains imposed on the unit may cause damage thereto.

Mount the sockets, taking care that they are installed in the proper places so that the numbers stamped on them will correctly indicate the type of tube to be inserted. Observe also that the keyway in the socket is properly oriented, lest it become necessary to remove all of the wires from the socket if it is later found to be reversed. It is advisable also to solder at least one spot (preferably adjacent to a mounting screw) on each socket saddle to chassis, since many ground connections are made to the lugs on the saddle, and trouble due to poor contact may develop unexpectedly unless a permanent good contact is insured by soldering.

Install the power transformer by means of the nuts shipped thereon, observing that the terminals on the transformer are properly placed according to the Pictorial Diagram.

## WIRING

Having completed the assembly operations described above, the actual wiring may start, observing the suggestions given on the sheet "General Construction Hints" packed with each Kit.

After bending down all socket-saddle ground-lugs not required for wiring, wire the filament circuit complete. The remaining wiring may be installed in any convenient sequence. It will be found a great help in wiring if each wire in the Pictorial Diagram is marked over with a colored pencil as the corresponding wire in the set is installed.

## VOLTAGE TEST

If all connections are found to be correct, the tubes may be inserted and the line-cord plug connected to a 110-volt, 60 cycle receptacle, and the speaker (1500 to 2000 ohm field) plugged in. A slight turn of the tone control knob to the right will turn on the receiver. After a brief warm-up period the voltages shown on the Schematic Diagram should be checked with a high-resistance voltmeter, if available. Voltages indicated are measured from the point shown, to the chassis, with the chassis as the negative terminal. If values measured are materially different than shown on the diagram, a thorough recheck of the circuit should be made. **Be sure the receiver is turned off and the line-cord dis-connected from the power receptacle while the wiring is being checked.**

## ALIGNMENT

The I. F. amplifier is aligned in the usual manner. Connect a service oscillator between the chassis and the grid of the 6A8 tube, using a condenser .0005 mfd to .25 mfd. between the grid and the high side of the generator output. Do not remove the grid clip for this operation. Set the dial near 600 KC, and proceed with alignment at 456 KC.

Turn the audio volume control on full. Increase the output of the service oscillator until a signal is just audible. Adjust each I. F. trimmer so that maximum volume is obtained. It is best to repeat this procedure two or three times on each trimmer to obtain the most accurate adjustment. These trimmers are adjusted with a small screwdriver through the openings in the top of the shield on each I. F. transformer.

The service oscillator should now be connected to the antenna and ground terminals of the receiver, with a 200-mmf condenser between the antenna terminal and the service oscillator.

Set the dial and the service oscillator to 1400 KC and adjust the trimmer on the rear section of the gang condenser for maximum output, reducing the generator output as alignment proceeds. Follow this adjustment by similar adjustments on the middle and front sections of the gang condenser. After this is done the service oscillator should be set at 600 KC and the signal tuned in on the receiver. The oscillator padding condenser at the left end of the chassis, should be turned slowly in one direction while the gang condenser is rocked back and forth across the signal until a maximum is obtained. It is advisable now to return to 1400 KC and re-align at that point. The receiver should now be ready to connect to an antenna for operation.

# COMPLETE PARTS LIST

## 7-Tube AC "Utility" Broadcast Receiver

*Only those parts followed by * are available from Meissner or Thordarson.*

**No. 12-1022 ESSENTIAL KIT**

1 Punched steel chassis, 10" x 12" x 3", 11-8213
1 Calibrated slide-rule dial and escutcheon, 23-8207
1 3-gang tuning condenser, 365-mfd., 21-5140 *
1 Broadcast-band antenna coil, 14-1004 *
1 Broadcast-band R-F coil, 14-1005 *
1 Broadcast-band oscillator coil, 14-4243 *
1 Input I-F transformer, 16-5740 *
1 Output I-F transformer, 16-5742 *
1 Adjustable padding condenser, 225-650 muf.
4 No. 2-56 x ⅜" R. H. screws for escutcheon
4 No. 2 lockwashers
4 No. 2-56 brass nuts for escutcheon

**No. 10-1103 COMPLETE KIT (less cabinet)**

All parts listed above plus the following:

1 Power transformer, Thordarson T24R02U *
1 25,000-ohm tone control with switch, 19257
1 500,000-ohm volume control, 19258
1 15-15-mfd., 450-volt filter condenser, 16124
1 Mounting plate for 16124 condenser, 19286
1 10-mfd., 25-volt electrolytic condenser
1 .1-mfd., 400-volt paper condenser
2 .1-mfd., 200-volt paper condensers
3 .05-mfd., 400-volt paper condensers
5 .05-mfd., 200-volt paper condensers
2 .006-mfd., 600-volt paper condensers
3 .00025-mfd. mica condensers
1 .00005-mfd. mica condenser
1 300-ohm, 1-watt resistor
1 300-ohm, ¼-watt resistor
1 500-ohm, ¼-watt resistor
2 30,000-ohm, 1-watt resistors
1 40,000-ohm, ½-watt resistor
2 50,000-ohm, ¼-watt resistors
2 100,000-ohm, ¼-watt resistors
2 250,000-ohm, ¼-watt resistors
2 500,000-ohm, ¼-watt resistors
1 Mallory bias cell and holder
6 Molded bakelite octal tube sockets
1 4-prong wafer-type speaker socket
1 A-G terminal strip
4 Small size grid clips
1 A-C line cord and plug
1 Tuning indicator assembly and cable
2 6.3-volt dial lamps, bayonet base
1 ¼" rubber grommet
2 ⅜" rubber grommets
3 Black bakelite knobs
1 Tie-lug, three insulated terminals
6 Tie-lugs, two insulated terminals
1 Tie-lug, one insulated terminal
4 Panel spacer dowels, ½" dia. x 11/16"
1 Shakeproof type soldering lug
4 No. 6-32 x 1" R.H. black screws
26 No. 6-32 x ¼" R.H. steel screws
40 No. 6 lockwashers
39 No. 6-32 hexagon nuts
4 No. 6 brass washers
7 Lengths solid hook-up wire, assorted colors
1 Length stranded green hook-up wire
1 Length shielded wire
1 Length black insulating wire sleeving, .053"
1 Length rosin-core solder

Note: To use a PM Speaker use 8 inch 8 ohm (Jensen P8-U or equivalent) and substitute Thordarson T20C53 * filter choke in series with a 1800 ohm 10 watt resistor instead of the speaker field winding. For output transformer use Thordarson # T22S58 *

2 6K7 Metal tubes
1 6A8 Metal tube
1 6Q7 Metal tube
1 6V6 or 6V6G tube
1 5Y4G rectifier tube

1 Dynamic speaker with 4-prong plug; 1500 to 2000-ohms field resistance; output transformer to match single 6V6 in Class A; power handling capacity, 5 watts minimum.

No. 11-8215 Punched steel panel, black wrinkle finish; 9½" x 14½" x 1/16"

No. 11-8212 Steel cabinet complete with hinged lid, black wrinkle finish 9½" x 14½" x 11⅛" deep.

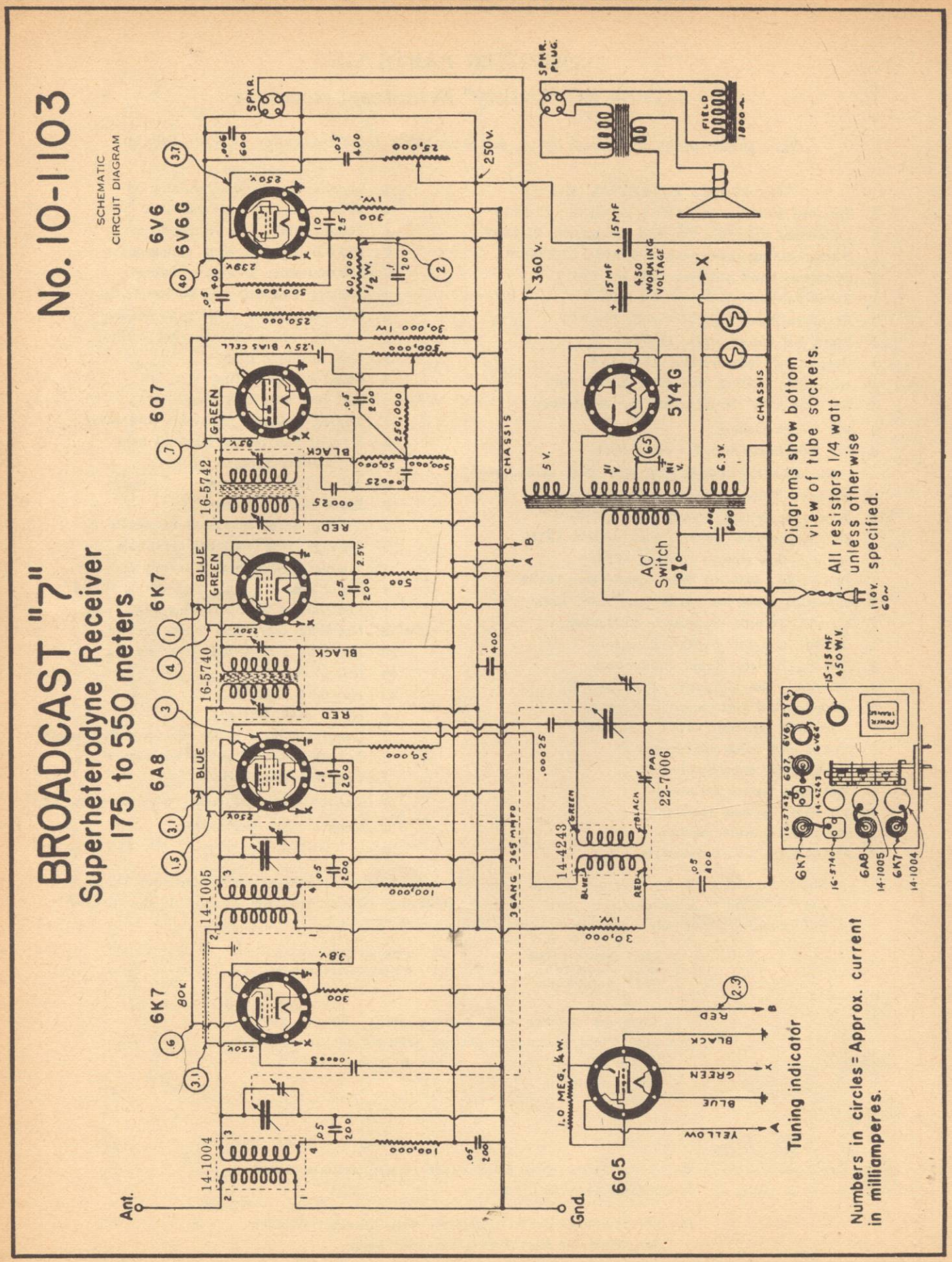
No. 10-1103
SCHEMATIC CIRCUIT DIAGRAM
BROADCAST "7"
Superheterodyne Receiver
175 to 550 meters
6V6
6V6G
6Q7
6K7
6A8
6K7
6G5
5Y4G
16-5742
16-5740
14-1005
14-1004
14-4243
22-7006
SPKR.
SPKR. PLUG
FIELD
CHASSIS
AC Switch
Ant.
Gnd.
Diagrams show bottom view of tube sockets.
All resistors 1/4 watt unless otherwise specified.
Tuning indicator
Numbers in circles = Approx. current in milliamperes.

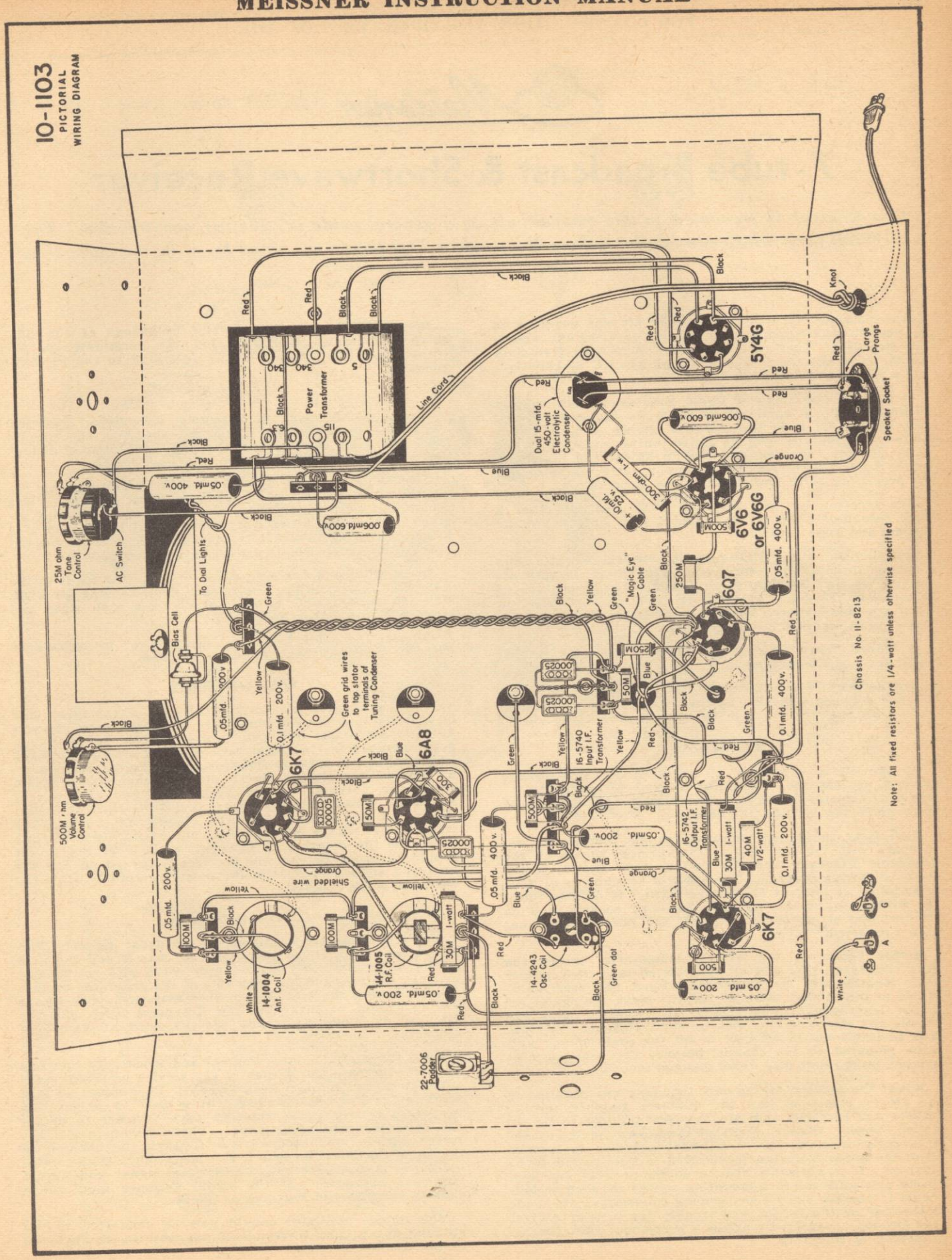
10-1103
PICTORIAL
WIRING DIAGRAM
Power Transformer
Line Cord
Dual 15-mfd. 450-volt Electrolytic Condenser
5Y4G
Speaker Socket
Knot
Large Prongs
6V6 or 6V6G
6Q7
6K7
6A8
6K7
25M ohm Tone Control
AC Switch
To Dial Lights
Bias Cell
500M-ohm Volume Control
Green grid wires to top stator terminals of Tuning Condenser
"Magic Eye" Cable
16-5740 Input I.F. Transformer
16-5742 Output I.F. Transformer
14-1004 Ant. Coil
14-1005 R.F. Coil
14-4243 Osc. Coil
Shielded wire
22-7006 Padder
Chassis No. 11-8213
Note: All fixed resistors are 1/4-watt unless otherwise specified

COMPLETE INSTRUCTIONS
FOR CONSTRUCTION AND OPERATION OF THE

Meissner

# 7-tube Broadcast & Shortwave Receiver

*This receiver is presented in this manual only as a general guide in receiver construction. The essential parts which are available from Meissner or Thordarson are noted by * in the parts list.*

The Meissner No. 10-1104 receiver kit was designed to answer the requirements for a receiver covering the American Broadcast Band and the Short-Wave entertainment bands. It covers the frequency range 540 KC to 1600 KC, and 5.9 MC to 18.8 MC.

It utilizies one stage of Radio Frequency Amplification on both bands, in combination with two high-gain Ferrocart (iron-core) I. F. transformers, giving excellent selectivity and sensitivity over its entire tuning range. A Sensitivity Control has been provided to adjust the maximum sensitivity of the receiver to an amount commensurate with the prevailing noise level at the place of operation.

The receiver has conventional AVC obtained from a diode second-detector, and is provided with manual Volume Control and Tone Control.

Its full-vision 7-inch slide-rule dial with three scales (one a 0-100) in different colors, rear illuminated, is very attractive whether installed in an already existing cabinet, or installed in the steel cabinet with front panel finished in black crackled lacquer, which is available to those who desire a special cabinet for this receiver.

A "Magic Eye" Cathode Ray Tuning Indicator is provided as standard equipment.

The accessories required are tubes as listed in the parts list, and a dynamic speaker having a 1500 to 2000 ohm field and output transformer to match a single 6V6 tube.

## ASSEMBLY

As the kit is unpacked, all parts should be carefully checked against the Parts List on back of this folder. Any discrepancies should be reported at once to the supplier from whom the kit was purchased.

The parts should be mounted on the chassis in accordance with the top view of the receiver shown on the Schematic Diagram, and the bottom view shown in the Pictorial Wiring Diagram. The order of assembly is of little importance as long as the Range Switch is omitted until the wiring around the RF and Converter sockets, and on the terminal strips mounted under the range switch, has been completed.

Before beginning the wiring, temporarily install the gang condenser, dial and all controls so that their proper shaft lengths may be determined when the receiver is placed in the cabinet intended for it. Mark the shafts for proper lengths and then remove the controls from the chassis and saw each one with its shaft clamped in a vise. It is advisable not to attempt to cut the shaft of any unit while mounted on the chassis, because the heavy strains imposed on the unit may cause damage thereto.

Mount the sockets, taking care that they are installed in the proper places so that the numbers stamped on the sockets will correctly indicate the type of tube to be installed therein. Observe also that the keyway in the socket is properly oriented, lest it become necessary to remove all of the wires from the socket if it is later found to be reversed. It is advisable also to solder at least one spot (preferably adjacent to a mounting screw) on each socket-saddle to chassis, since many ground connections are made to the lugs on the saddle, and trouble due to poor contact may develop unexpectedly **unless a permanent good contact is insured by soldering.**

Install the Power Transformer by means of the nuts shipped thereon, observing that the terminals on the transformer are properly placed according to the Pictorial Diagram.

## WIRING

Having completed the assembly operations described above, the actual wiring may start, observing the suggestions given on the sheet "General Construction Hints" packed with each Kit.

After bending down all socket-saddle-ground-lugs not required for wiring, wire the filament circuit complete. The remaining wiring may be installed in any convenient sequence. It will be found a great help in wiring if each wire in the Pictorial Diagram is marked over with a colored pencil as the corresponding wire in the set is installed.

When all wiring has been finished except the leads to the Range Switch, install and wire that item, keeping all wires short and direct, and as well spaced from each other and from metal objects as possible.

Connect the cable from the "Magic Eye" in accordance with the Schematic and Pictorial Diagram.

## VOLTAGE TEST

If all connections are found to be correct, the tubes may be inserted and the line-cord plug connected to a 110-volt 60-cycle receptacle and the speaker (1500- to 2000-ohm field) plugged in A slight turn of the Tone-Control knob to the right will turn on the receiver. After a brief warm-up period the voltages shown on the Schematic Diagram should be checked with a high-resistance voltmeter, if available. Voltages indicated are measured from the point shown, to the chassis, with the chassis as the negative terminal. If values measured are materially different than shown on the diagram, a thorough recheck of the circuit should be made. **Be sure the receiver is turned off and the line-cord disconnected from the power receptacle while the wiring is being checked.**

## ALIGNMENT

The I. F. amplifier is aligned in the usual manner. Connect a service oscillator between the chassis and the grid of the 6A8 tube, using a condenser .0005 mfd to .25 mfd between the grid and the high side of the generator output. Do not remove the grid clip for this operation. The Range Switch should be turned to the Broadcast band, and the dial set near 600 KC; then proceed with alignment at 456 KC.

Turn the Audio Volume Control and Sensitivity Controls on full. Increase the output of the service oscillator until a signal is just audible. Adjust each I. F. trimmer so that maximum volume is obtained. It is best to repeat this procedure two or three times on each trimmer to obtain the most accurate adjustment. These trimmers are adjusted with a small screwdriver through the opening in the top of the shield on each I. F. transformer. If no service oscillator is available tune in a weak signal and adjust trimmers as above. If the signal becomes loud use a shorter antenna and continue as above.

The service oscillator should now be connected to the antenna and ground terminals of the receiver, through the proper dummy antenna.

Close the gang condenser and see that the dial pointer position coincides with the last line at the low-frequency end of the dial. If this condition does not obtain, loosen the set-screw on the dial-drum, make the necessary correction and firmly tighten the screw.

Turn the Range Switch to the Short Wave (extreme clockwise) position, set the dial and the service oscillator to 16 MC, connect a 400-ohm resistor between the service oscillator and the antenna binding post, as a dummy antenna, turn the output of the service oscillator up to maximum, tighten the top trimmer in the oscillator coil (No. 14-7480) until just snug, then loosen it 4 turns, and then, as the trimmer is tightened, set it to the position of maximum response, reducing the output of the service oscillator as alignment proceeds. (If two responses are found of nearly equal intensity, adjust for the one with the trimmer farthest open). Now align the RF trimmer, but since the RF adjustment has a slight effect upon the oscillator frequency, it will be necessary to rock the tuning condenser slightly to keep the signal tuned in. Now adjust the antenna circuit, reducing input as alignment proceeds. If the receiver tends to "Motorboat", turn down the service oscillator output until the trouble stops. Some service oscillators, however, leak enough signal that even with the output control set at zero, the receiver is still overloaded, in which case it is necessary to turn down the sensitivity and audio controls until the receiver behaves properly.

Set the service oscillator to 6MC and tune in the signal with the receiver dial. Now, while rocking the condenser back and forth across the signal, turn the short-wave padding condenser continuously in one direction until the output is the greatest. A few minutes spent in experiment on this adjustment will show more than a further lengthy explanation. Because of the fact that the adjustable padding condenser is but a relatively small portion of the total padding capacity on short-wave, this adjustment will not be very sharp. (The short-wave padding condenser is the one across which is connected the fixed mica condenser.)

Turn the range switch to the broadcast position, substitute a 200 mmf condenser for the 400 ohm resistor as a Dummy Antenna, set the dial and the service oscillator to 1400 KC, and align the circuits again (bottom trimmers) in the same manner as described above. Having done this, set the service oscillator to 600 KC and tune the receiver dial for maximum response. Here pad the oscillator circuit in the same manner as the Short-Wave padding described above. This adjustment will be far sharper than the Short-Wave padding operation and should therefore be done carefully. Return to 1400 KC and re-align at that frequency.

---

## COMPLETE PARTS LIST

## 7-Tube Broadcast & Shortwave Receiver

*Note: Only those parts followed by * are available from Meissner or Thordarson.*

### No. 12-1023 ESSENTIAL KIT

1 Punched steel chassis, 10" x 12" x 3", 11-8213
1 Calibrated slide-rule dial and escutcheon, 23-8208
1 3-gang tuning condenser, 365-mfd., 21-5140 * (remove trimmers)
1 Range switch, 6-pole 2- position, 24-8265
1 Adjustable padding condenser, 22-5211 *
1 BC-SW band antenna coil, 14-7476 *
1 BC-SW band R-F coil, 14-7478 *
1 BC-SW band oscillator coil, 14-7480 *
1 Input I-F transformer, 16-5740 *
1 Output I-F transformer, 16-5742 *
4 No. 2-56 x ⅜" R.H. screws for escutcheon
4 No. 2 lockwashers
4 No. 2-56 brass nuts for escutcheon

### No. 10-1104 COMPLETE KIT (less cabinet)

All parts listed above plus the following:
1 Power transformer, Thordarson T24R02U *
1 25,000-ohm sensitivity control, 19288
1 25,000-ohm tone control with switch, 19257
1 500,000-ohm volume control, 19258
1 15-15-mfd., 450-volt filter condenser, 16124
1 Mounting plate for 16124 condenser, 19286
1 10-mfd., 25-volt electrolytic condenser
1 .1-mfd., 400-volt paper condenser
1 .1-mfd., 200-volt paper condenser
3 .05-mfd., 400-volt paper condensers
7 .05-mfd., 200-volt paper condensers
2 .006-mfd., 600-volt paper condensers
1 .004-mfd. mica condenser
2 .00025-mfd. mica condensers
1 .0001-mfd. mica condenser
1 300-ohm, 1-watt resistor
2 400-ohm, ¼-watt resistors
1 1,500-ohm, ¼-watt resistor
2 30,000-ohm, 1-watt resistors
1 40,000-ohm, ½-watt resistor
2 50,000-ohm, ¼-watt resistors
2 100,000-ohm, ¼-watt resistors
2 250,000-ohm, ¼-watt resistors
2 500,000-ohm, ¼-watt resistors
1 Mallory bias cell and holder
6 Molded bakelite octal tube sockets
1 4-prong wafer-type speaker socket
1 A-G terminal strip
4 Small size grid clips
1 A-C line cord and plug
1 Tuning indicator assembly and cable
2 6.3-volt dial lamps, bayonet base
1 ¼" rubber grommet
2 ⅜" rubber grommets
5 Black bakelite knobs
2 Shakeproof type soldering lugs
7 Tie-lugs, two insulated terminals
1 Tie-lug, one insulated terminal
4 Panel spacer dowels, ½" dia. x 11/16"
4 No. 6-32 x 1" R.H. black screws
26 No. 6-32 x ¼" R.H. steel screws
41 No. 6 lockwashers
41 No. 6-32 hexagon nuts
2 No. 6 brass washers
7 Length solid hook-up wire, assorted colors
1 Length stranded green hook-up wire
1 Length black insulating wire sleeving, .053"
1 Length rosin-core solder

Note: To use a PM Speaker use 8 inch 8 ohm (Jensen P8-U or equivalent) and substitute a Thordarson #T20C53 * filter choke in series with a 1800 ohm 10 watt resistor instead of the speaker field winding.

For output transformer use T22S58 * .

2 6K7 Metal tubes
1 6A8 Metal tube
1 6Q7 Metal tube
1 6V6 or 6V6G tube
1 5Y4G rectifier tube

1 Dynamic speaker with 4-prong plug; 1500 to 2000 ohms field resistance; output transformer to match single 6V6; power handling capacity, 5 watts minimum.

No. 11-8217 Punched steel panel, black wrinkle finish, 9½" x 14½" x 1/16"

No. 11-8212 Steel Cabinet complete with hinged lid, black wrinkle finish, 9½" x 14½" x 11⅛" deep

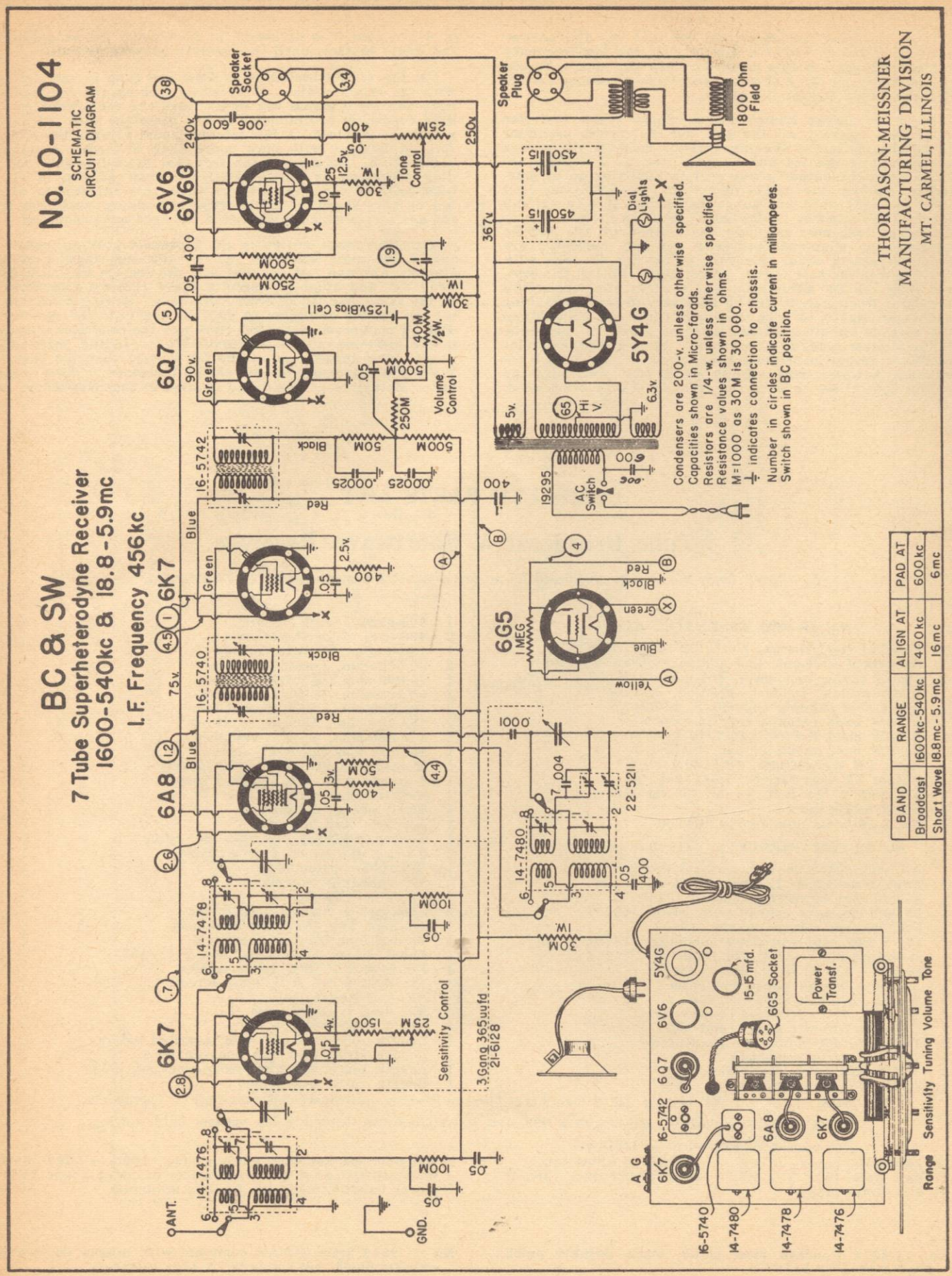


| BAND | RANGE | ALIGN AT | PAD AT |
|---|---|---|---|
| Broadcast | 1600kc-540kc | 1400kc | 600kc |
| Short Wave | 18.8mc-5.9mc | 16mc | 6mc |

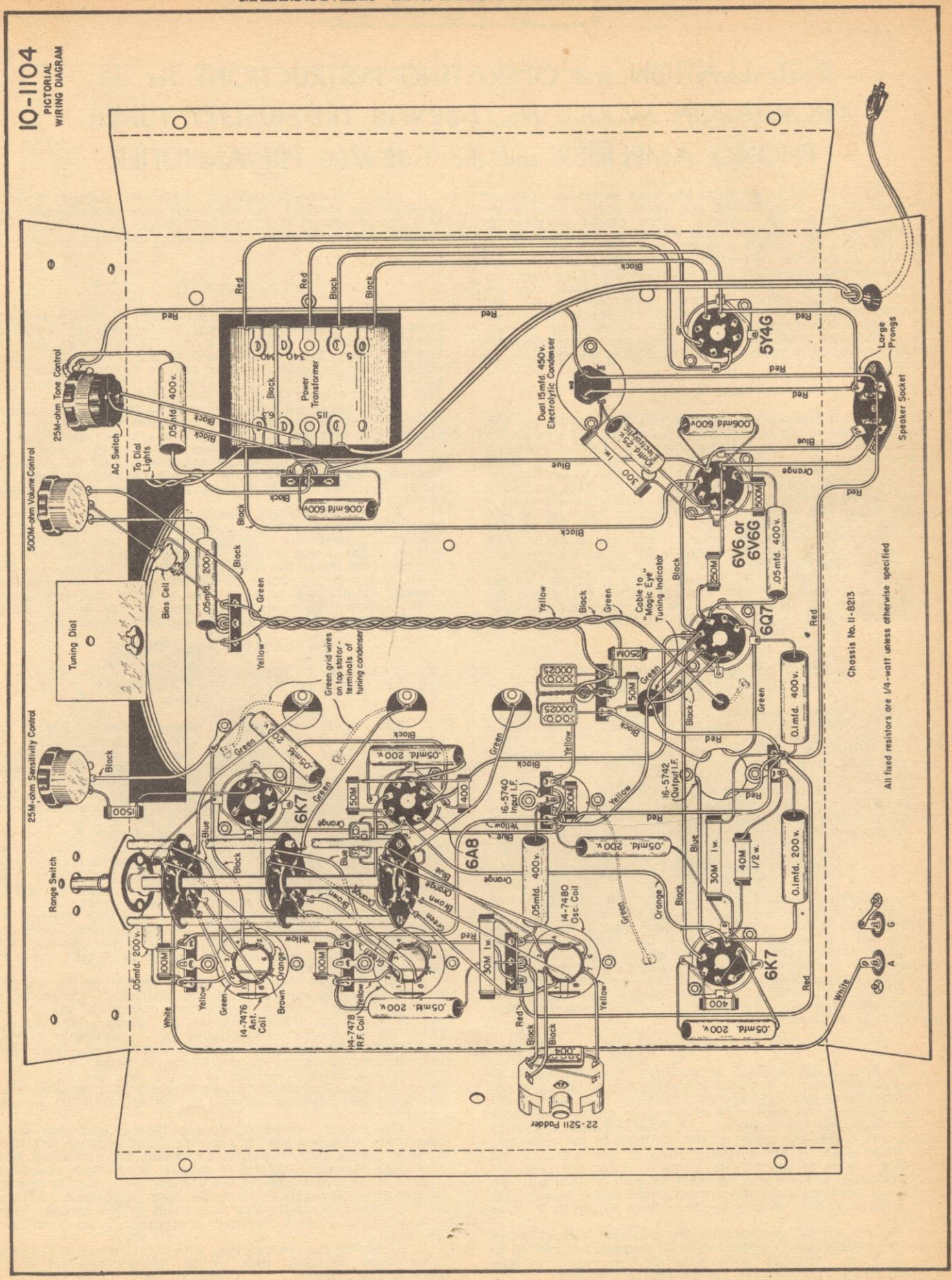
10-1104
PICTORIAL WIRING DIAGRAM
25M-ohm Tone Control
500M-ohm Volume Control
25M-ohm Sensitivity Control
Range Switch
AC Switch
To Dial Lights
Tuning Dial
Bias Cell
Green grid wires on top stator-terminals of tuning condenser
Power Transformer
Dual 15mfd. 450v. Electrolytic Condenser
Cable to "Magic Eye" Tuning Indicator
Speaker Socket
Large Prongs
5Y4G
6V6 or 6V6G
6Q7
6K7
6A8
16-5740 Input I.F.
16-5742 (Output I.F.
14-7480 Osc. Coil
14-7476 Ant. Coil
14-7478 R.F. Coil
22-5211 Padder
Chassis No. 11-8213
All fixed resistors are 1/4-watt unless otherwise specified

# INSTALLATION and OPERATING INSTRUCTIONS for the THORDASON MODEL No. T-32W10 TRU-FIDELITY TUNER-PHONO AMPLIFIER and the T-32W00 PRE-AMPLIFIER

This Tru-Fidelity amplifier has been expressly designed for home music installations and other applications where quality reproduction is required. Care should be taken in selecting any associate apparatus which may affect its operations and limit the excellent results that are possible. If the following instructions are carefully followed no difficulty will be experienced in the installation and operation of the amplifier. Before proceeding with the installation make sure that the power or lighting circuit supplies the proper voltage and frequency as indicated on the data plate. Thordarson amplifiers are designed for operation on 110-120V-50/60 cycle current, unless the data plate is stamped otherwise. Amplifiers for operation from other voltages and frequencies are available on special order.

## CONTROL PANEL

The control panel contains one VOLUME control and two equalizer controls marked TREBLE and BASS. The frequency response of the amplifier is linear when the TREBLE equalizer control is set at 0 or the center of the dial, and the BASS control set at the #1 position on the dial. The treble frequencies are accentuated or boosted when the TREBLE control is turned toward the left or MAX position. Likewise, attenuation occurs when this control is turned toward the right or MIN position. The bass frequencies are accentuated or boosted when the BASS control is turned toward the right or MAX position. These controls are effective for correcting reproduction due to the difference in pickups, records, speakers, or accoustical conditions. An AC line switch is located on the BASS control shaft. Do not turn the switch ON unless the amplifier and the speaker and other accessories have been properly connected. (SEE OPERATION SHEET)

## INPUT CONNECTIONS

### OPERATION WITH AM-FM TUNER OR CRYSTAL PHONO PICKUP:

The amplifier has one high impedance input channel marked PHONO-TUNER. Connect the output of the AM-FM tuner or crystal phono pickup to the amplifier input jack marked PHONO-TUNER by means of a low capacity, single conductor, shielded lead, using the input plug provided. To drive the amplifier to full rated output, the tuner or phono pickup should be capable of delivering approximately 1 volt of signal. If the installation includes both an AM or FM tuner and a phono pickup, a simple switching system can be employed to select the desired signal to be applied to the amplifier input.

### OPERATION WITH A MAGNETIC REDUCTANCE PHONO PICKUP:

An additional octal socket marked PLUG-IN-PRE-AMP is provided on the amplifier chassis to accommodate a Thordarson T-32W00 Plug-in-Pre-Amp and Equalizer Stage if operation is desired with a magnetic reluctance type pickup cartridge. This small self-contained plug-in-pre-amp is an accessory unit designed for use with the T-32W10 amplifier to provide the additional voltage amplification and bass equalization necessary when employing magnetic phono pickup cartridges. The chassis socket which receives the plug-in-pre-amp has been pre-wired at the factory.

## SPEAKERS

A high grade speaker of at least 10 watts rating is recommended if one is desirous of making use of the excellent characteristic of this Tru-Fidelity Amplifier. Best results will be obtained with the dual types in operating separate speakers for the high and low registers. A filter network is usually supplied to divide the output of the amplifier to the speakers. This filter must fit the characteristics of the speakers and therefore it must be designed to match the frequency response and impedance of the units. Speaker systems of this type are capable of converting electrical energy into sound energy with good efficiency at all frequencies from 30 to 10,000 C. P. S. or higher.

Several single speaker units are available with effective enclosures that reproduce efficiently all frequencies from 60 to 8000 C. P. S. Although these units are less expensive than the dual types, very excellent results can be obtained.

Either electro-dynamic or permanent magnet dynamic speakers are suitable. If electro-dynamic speakers are used they should contain their own field supply or a separate field should be provided since the amplifier does not supply field power.

## OPERATIONS

After the tubes have been installed and the speaker and input circuits connected, the amplifier is ready for operation. However, check all connections again to make sure they are correct. Insert the line cord and turn the switch ON. Allow about one minute for the tubes to heat up before advancing the volume control. The controls should be turned up slowly at first so as to acquire the feel of the amplifier.

If an objectionable hum is noted in the speaker, reverse the line cord polarity. To do this remove the plug and give it a half-turn and reinsert it in the wall receptacle. Occasionally hum may be caused by faulty tubes. If hum still persists due to power line disturbance, the amplifier should be grounded. Connect a wire to the #1 lug on the speaker terminal board and fasten the other end to a water pipe or hot water or steam radiator.

A pair of mounting brackets are supplied to securely fasten the chassis in permanent installations. To mount the brackets, remove the felt mounting feet from the chassis bottom. Then, using the self-threading screws which hold the mounting feet, fasten the mounting brackets to the corresponding holes in the bottom cover of the amplifier. If the amplifier chassis is mounted in a cabinet or other confined space, allow sufficient room around the unit for free flow of air to provide adequate ventilation of the amplifier components.

## OPERATION DATA SHEET

### *Thordarson T-32W00 Plug-in-Pre-Amplifier and Equalizer Stage for Magnetic Pick-up Cartridges*

This small self-contained plug-in pre-amplifier is an accessory unit designed for use with Thordarson T-32W10 10 watt Phono-Tuner amplifier or any other audio amplifier or radio set where magnetic operation is desired. This unit, employing a minature 12AT7 twin triode tube, provides the additional voltage amplification and bass equalization necessary when employing a magnetic reluctance phono pickup cartridge.

The T-32W10 amplifier chassis socket which receives the plug-in pre-amp has been pre-wired at the factory. No additional wiring operations are required to employ a magnetic pickup with this amplifier. To add the pre-amp to other equipment it is necessary to mount an octal socket on the chassis and wire to it the supply voltage loads and signal connections.

The bass equalization provided by this pre-amp is adequate for all popular magnetic reluctance phono pickups. A maximum bass boost of 15 db occurs at 100 cycles; The frequency response from 1000 cycles out to 20,000 cycles is flat within ± 2 db.

The maximum signal that can be applied to the pre-amp at 1000 cycles is approximately 100 millivolts. To employ a magnetic pickup having a greater rated output will require the use of a voltage divided network to attenuate the signal. This can be readily accomplished by connecting a ½ watt resistor of the proper value in series with the input load. For example, if the output of the pickup is rated at .5 volts, connect a 4 megohm resistor in series with the input load. Since the input resistance of the pre-amp is 1 megohm, this will apply one fifth the voltage, or 100 millivolts to the pre-amplifier.

The plug-in pre-amplifier also finds application as a microphone pre-amp stage for use with T-32W10 phono amplifier or other medium gain amplifiers to provide the necessary gain when high impedance crystal or dynamic microphone operation is desired. For this service the pre-amp base pins #4 and #5 are joined together this removes the bass equalization making the response essentially flat from 50 to 20,000 cycles. The voltage gain under this condition of operation is 38 db at 1000 cycles.

To employ the pre-amplifier with the Thordarson T-32W10 Tuner-Phono amplifier, refer to the instruction sheet which accompanies this unit.

# Performance Characteristics

## T-32W10 10 Watt Tuner - Phono Amplifier

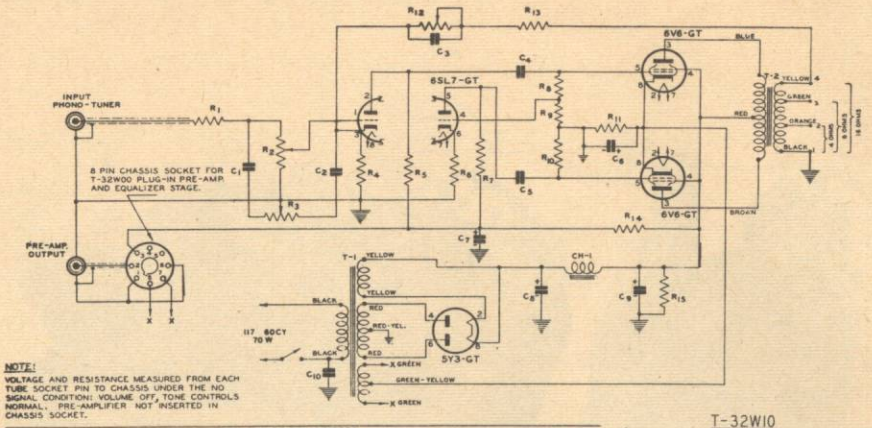


| TUBE TYPE | TUBE SOCKET PIN NUMBERS 1 VOLTS | 1 OHMS | 2 VOLTS | 2 OHMS | 3 VOLTS | 3 OHMS | 4 VOLTS | 4 OHMS | 5 VOLTS | 5 OHMS | 6 VOLTS | 6 OHMS | 7 VOLTS | 7 OHMS | 8 VOLTS | 8 OHMS |
|---|---|---|---|---|---|---|---|---|---|---|---|---|---|---|---|---|
| 6SL7-GT INVT. | 0 | 0 | 120 | 287 K | 1.4 | 2200 | 0 | 18 K | 120 | 287 K | 1.4 | 2200 | 3.15AC* | 250 | 3.15AC* | 250 |
| 6V6-GT OUTPUT | 0 | 0 | 3.15AC | 250 | 300 | 20 K | 305 | 20 K | 0 | 470 K | – | – | 3.15AC | 250 | 17 | 250 |
| 5Y3-GT RECT. | – | – | +335 | 20.4 K | – | – | 350 | 210 | – | – | 350 | 210 | – | – | +335 | 20.4 K |

VOLTAGE READINGS WERE TAKEN WITH AN RCA VOLT-OHMYST #195. TO DUPLICATE, THESE READINGS A METER HAVING AN EQUIVALENT HIGH RESISTANCE MUST BE USED.
*HEATERS ARE ABOVE GROUND BY +17V.DC

T-32W10
10 WATT PHONO-TUNER
AMPLIFIER

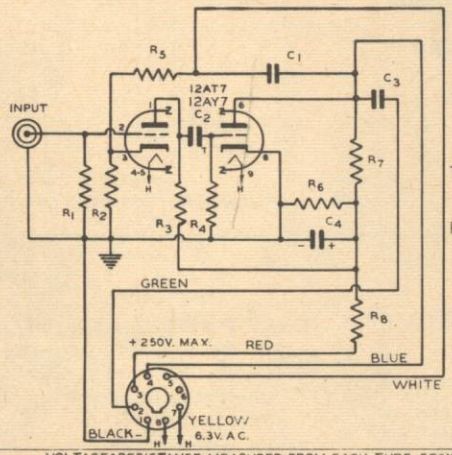


T-32W00 PLUG-IN PRE-AMPLIFIER
&
EQUALIZER STAGE
FOR MAGNETIC PICK-UP CARTRIDGES

| TUBE TYPE | TUBE SOCKET PIN NO. 1 VOLTS | 1 OHMS | 2 VOLTS | 2 OHMS | 3 VOLTS | 3 OHMS | 4 VOLTS | 4 OHMS | 5 VOLTS | 5 OHMS | 6 VOLTS | 6 OHMS | 7 VOLTS | 7 OHMS | 8 VOLTS | 8 OHMS | 9 VOLTS | 9 OHMS |
|---|---|---|---|---|---|---|---|---|---|---|---|---|---|---|---|---|---|---|
| T-12AT7 OR T-12AY7 | 45 | 315K | 0.0 | 1MEG. | .8 | 2200 | 3.15AC | 0 | 3.15AC | 0 | 40 | 315K | -.9 | 4.7M | 0 | 0 | 3.15AC | 0 |

VOLTAGE READINGS WERE TAKEN WITH A SUPPLY VOLTAGE OF 250V. D.C. METER EMPLOYED - RCA #195 VOLT-OHMYST.
TO DUPLICATE THESE READINGS A METER HAVING AN EQUIVALENT HIGH RESISTANCE MUST BE USED.

POWER OUTPUT
10 watts or 32.2 db. Harmonic distortion 2%. Intermodulation distortion 8%.

FREQUENCY RESPONSE
± 1 db. 20-20,000 cps.

INPUT CHANNELS
One medium level high impedance (1 meg.) input channel is provided. Gain - 69 db. Sensitivity - 1.1 volts rms is required from the tuner or phono pickup to drive the amplifier to full output.

One optional high Z low level input for magnetic pickup cartridge or high Z microphone.
An additional octal socket is provided on the chassis to accommodate a T-32W00 Plug-in Pre-amp and Equalizer Stage when operation is desired with a magnetic reluctance type pickup cartridge. The chassis socket which receives the Plug-in Pre-amp has been wired at the factory. No additional wiring operations are required to employ a magnetic pickup with the 10 watt amplifier - just plug-in T-32W00 Pre-amp. The Pre-amp can also be utilized to supply the necessary additional amplification required when a microphone signal source is employed. See T-32W00 specifications for details.

The output of the Pre-amp has been brought to a connector on the rear of T-32W10 amplifier so that the various signal sources such as tuner, crystal pickup, magnetic pickup, or microphone can readily be selected and applied to the medium level input.

TONE CONTROLS
A dual treble control provides a boost of 10 db. at 10,000 cps , or an attenuation of 20 db. at 10,000 cps.

A Bass control provides a maximum boost of 8 db. at 100 cps. The AC line switch is mounted on this control.

OUTPUT IMPEDANCES
4-8-16 ohms are available at terminal board on chassis rear apron.

HUM LEVEL
70 db. below rated output.

TUBES
1 6SL7-GT, 2 6V6-GT, 1 5Y3-GT.

POWER REQUIREMENTS
70 watts, 117 volts, 50/60 cycles.

DIMENSIONS
10-1/4" x 7-3/8" x 2-3/4". A pair of mounting brackets are supplied to facilitate the mounting of the chassis in permanent installations.

NET WEIGHT
10.75 lbs.

# MEISSNER MODEL 9-1093 A.M.-F.M. RECEIVER

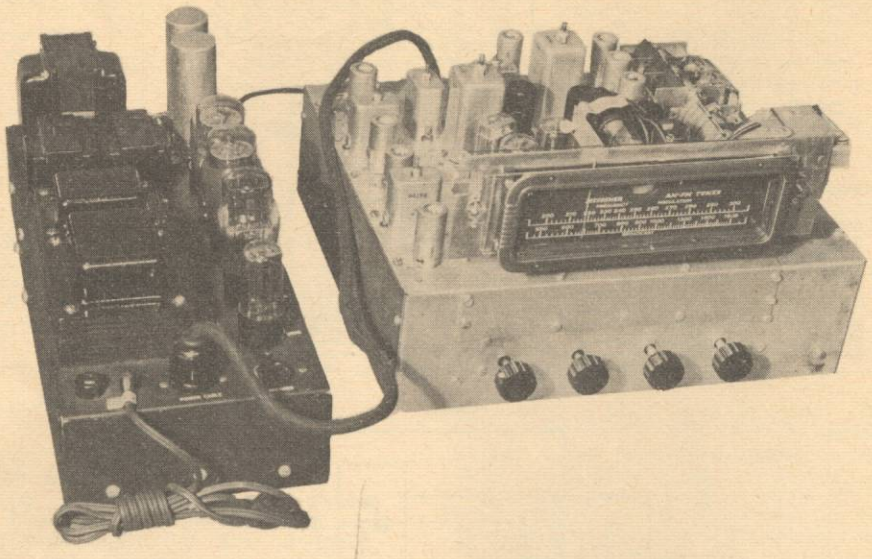

*This Receiver available from your Local Distributor.*

## I GENERAL INFORMATION

This receiver has two radio reception bands plus phonograph operation. The radio reception bands are as follows:
Standard Broadcast 535-1620 Kilocycles
Frequency Modulation 88-108 Megacycles

The broadcast band and frequency modulation band are calibrated on the tuning dial in kilocycles and in megacycles respectively.

POWER SUPPLY
This receiver is designed to operate from a power supply main of 105-125 volts, 50-60 cycle alternating current (AC). NEVER PLUG INTO ANY OTHER SUPPLY.

SPEAKER
The power amplifier is designed to operate a permanent magnet type of speaker with a voice coil impedance of 8 to 16 ohms.

ANTENNAS
This receiver is designed to operate on the standard broadcast band with the loop antenna which is provided, and on the frequency modulation band with a 300 ohm folded dipole antenna, which may be installed in the receiver cabinet (see Fig. 1). In most localities these antennas will be found to give excellent results

In some localities an outside dipole antenna may be required for FM receiption. To connect a dipole antenna for FM, connect the antenna transmission line to the strip marked "FM Ant."

If an outside antenna is desired for broadcast reception, it may be connected to the terminal marked "AM Ant." Loop should remain connected at all times.

When an outside antenna is used for broadcast reception, a good ground connection should also be used and connected to the "G" terminal of the four terminal strip. A cold water pipe or a metal rod driven several feet into the earth may be used to connect between the rod or pipe and the receiver chassis. Hot water, steam pipes, or metal conduit should not be used for grounds.

## II OPERATION

ON-OFF SWITCH AND VOLUME CONTROL;
In the extreme counter-clockwise position, the receiver is turned off. As the knob is rotated the first few degrees clockwise, the receiver is turned on; further rotation acts as volume control.

TONE CONTROL:
Full clockwise rotation of this control gives normal or "flat" response plus a small amount of treble boost. As the control is turned counter-clockwise, the treble boost is reduced and "flat" response is obtained. Further rotation in this direction reduces treble response and increases the bass response.

TUNING CONTROL:
The tuning control knob is used for selection of stations in the standard broadcast band, and the frequency modulation band.

SELECTOR SWITCH:
A four position selector switch provides sharp broadcast, high fidelity (band expansion) broadcast, and frequency modulation as it is rotated from extreme counter-clockwise position. Phonograph operation is obtained in the fourth or extreme clockwise position.

After a program has been located, make a fine adjustment of the tuning, watching the indicator, or eye, which has been provided to indicate proper tuning. Correct tuning has been obtained when the shadow angle on the eye pattern is minimum, i.e. when the eye is most nearly closed. Accurate tuning is essential for distortion free radio reception.

PHONOGRAPH INPUT:
A small input jack is provided at rear of chassis for connecting input from phonograph pickup. An A. C. outlet for operating the phonograph motor is available on cable at rear of chassis.

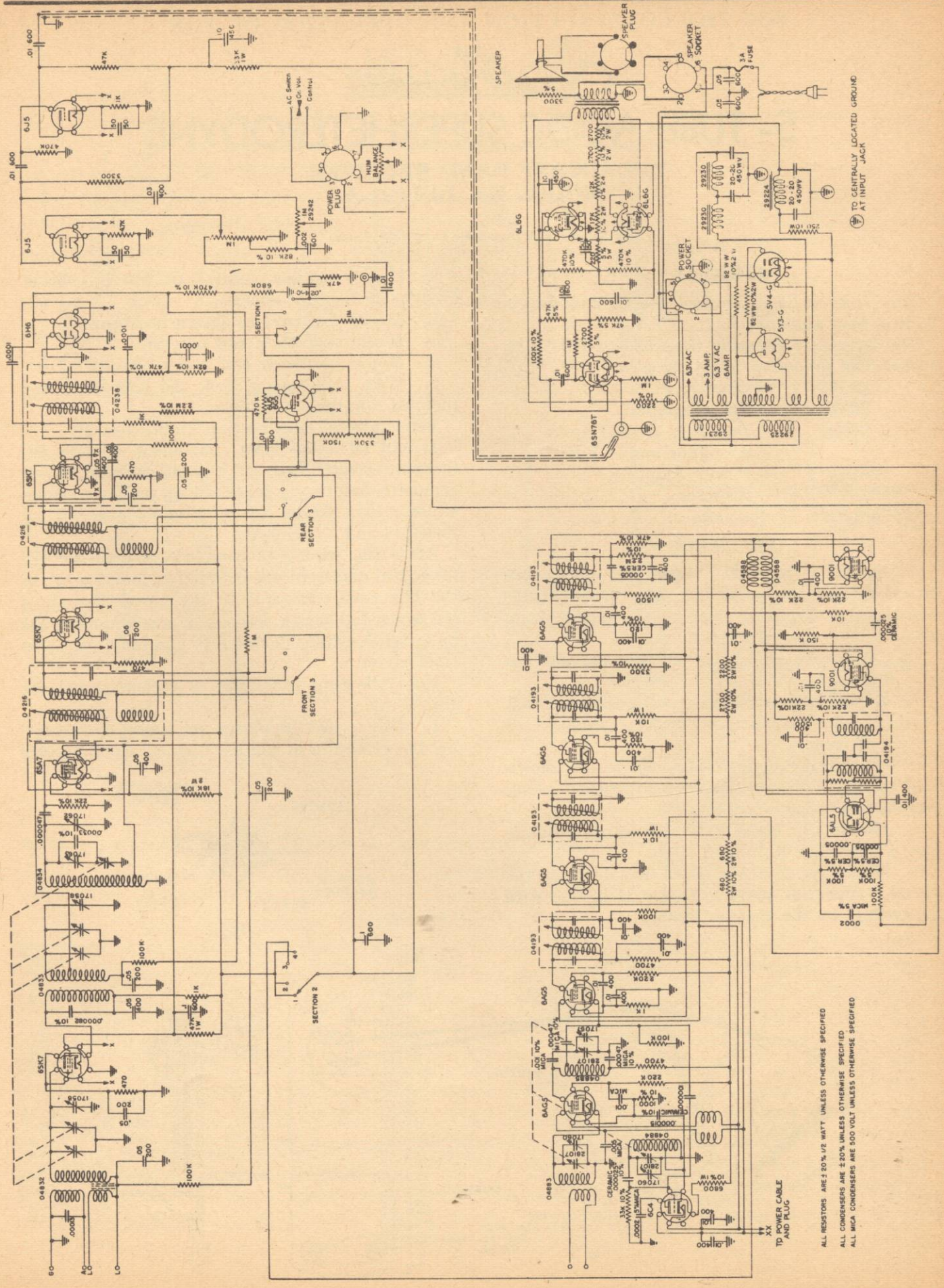
SPEAKER
SPEAKER PLUG
SPEAKER SOCKET
3A FUSE
TO CENTRALLY LOCATED GROUND AT INPUT JACK
AC Switch
Or Vol. Control
HUM BALANCE
POWER PLUG
POWER SOCKET
6J5
6H6
6SK7
6SA7
6L6G
5V4-G
5Y3-G
6SN7GT
6AC5
6AL5
6C4
SECTION 1
SECTION 2
SECTION 3
REAR SECTION 3
FRONT SECTION 3
63V AC
3 AMP.
63 V AC
6 AMP.
TO POWER CABLE AND PLUG
ALL RESISTORS ARE ±20% 1/2 WATT UNLESS OTHERWISE SPECIFIED
ALL CONDENSERS ARE ±20% UNLESS OTHERWISE SPECIFIED
ALL MICA CONDENSERS ARE 500 VOLT UNLESS OTHERWISE SPECIFIED

# COMPLETE INSTRUCTIONS FOR THE CONSTRUCTION AND OPERATION OF THE

Meissner

# 5- TUBE AC-DC SUPERHETERODYNE

## BROADCAST BAND RECEIVER
## MODEL No. 10-1191-A

*This Kit available from your Local Distributor.*

### GENERAL

This receiver is of modern design and uses a built-in loop antenna.

The frequency range is from 530 to 1620 kilocycles. The following tubes are used:

| | |
|---|---|
| 12SA7 | — Converter |
| 12SK7 | — I.F. Amplifier |
| 12SQ7 | — Detector, 1st A.F. Amplifier and A.V.C. |
| 50L6GT | — Power Amplifier |
| 35Z5GT/G | — Rectifier |

Use only No. 47 dial lamp.

### ASSEMBLY

As the kit is unpacked, check the parts contained against the parts list. Any discrepancies should be reported at once to the dealer from whom the kit was purchased.

The following procedure is recommended to save time and trouble in construction:

1. Mount tube sockets, making certain that keyways point as shown on pictorial diagram of bottom of chassis.
2. Mount bracket on front of chassis, as shown in Figure 2. Mount variable capacitor, using grommets as shown in Figure 1.
3. Mount I.F. transformers, rotating them to give a minimum of crossed leads.
4. Mount speaker, and place dial drum on the variable capacitor shaft so that it is in line with the pulleys on the speaker frame.
5. Mount volume control in lower hole of bracket on front of chassis.
6. String dial cord as shown in Figure 2.
7. Mount dial plate and pointer.
8. Mount oscillator coil under chassis.
9. Wire unit, using both the schematic and pictoral diagrams as guides.

Read general construction hints carefully.

It will be found most convenient to wire the filament circuit (Pins #2 and #7 on most tubes) complete, before any other wiring or parts are installed; then follow up with additional wiring, resistors and condensers.

After the wiring is complete and before the tubes and dial light are inserted in the receiver or the line cord connected to the power line, it is recommended that a recheck be made against the pictorial drawing, in order to eliminate any possible error.

The following procedure is recommended for alignment:

1. Use a test oscillator or signal generator. Set the generator at 455 Kc. Connect the high side

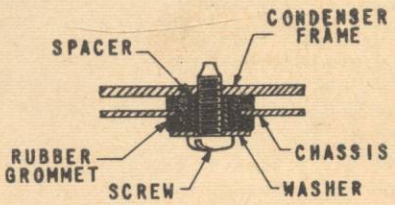


Fig. 1

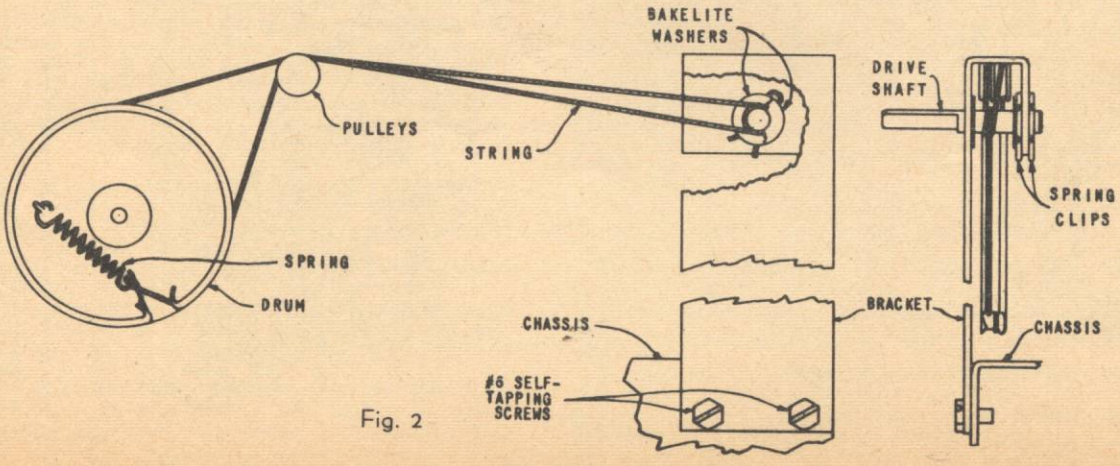


Fig. 2

of the generator through a .1 mfd. capacitor to pin #8 of the 12SA7. Set volume control to maximum. Adjust the trimmers at the top of both I.F. transformers for maximum output. Reduce the output of the signal generator until the signal is just audible and repeat this adjustment.

2. Remove signal generator lead from pin #8 of 12SA7 and connect it to yellow wire (antenna lead) from the loop antenna. Set receiver dial to 1400 Kc. Adjust signal generator to 1400 Kc. Rotate oscillator trimmer (on front section of variable capacitor) until signal is heard. There are two trimmers on the oscillator section, one on either side. If the trimmer on the right side is set too tight, it may not be possible to pick up the signal, even with the trimmer on the left wide open. If such should be the case, the trimmer on the right should be backed off to permit the left trimmer to tune properly. Reduce the input to the receiver, and adjust the trimmer on the rear section of the variable capacitor for maximum output.

For reception of distant stations, an external antenna may be connected to the antenna lead at the rear of the chassis.

Following is a chart of proper operating voltages. The finished set may be checked against these.

**NORMAL OPERATING VOLTAGES**

| PIN NO. | 1 | 2 | 3 | 4 | 5 | 6 | 7 | 8 |
|---|---|---|---|---|---|---|---|---|
| 12SA7 | 0 | 25.2 AC | 76 | 79 | 0 | 0 | 12.6 AC | 0 |
| 12SK7 | 0 | 25.2 AC | 0 | 0 | 0 | 80 | 37.8 AC | 76 |
| 12SQ7 | 0 | 0 | 0 | 0 | 0 | 37 | 12.6 AC | 0 |
| 50L6GT | 0 | 37.8 AC | 105 | 80 | 0 | 0 | 87.2 AC | 5.5 |
| 35Z5G/GT | 0 | 108 AC | 102 AC | NC | 9.8 AC | 0 | 87.8 AC | 108 |

## COMPLETE PARTS LIST

1 Chassis, #05267
1 Variable Capacitor, #05276
1 Pulley and Shaft, #05266
1 Input I.F. Transformer, #03964
1 Output I.F. Transformer, #03965
1 Loop Antenna, #B-14123
1 Oscillator Coil, #03963
1 Speaker, #05262
1 Volume Control, #A-20365-1
1 50-30 mfd. Electrolytic Capacitor, # A-40045-1
1 .2 mfd. 400V. Paper Condenser
1 .01 mfd. 400V. Paper Condenser
2 .05 mfd. 400V Paper Condenser
1 .05 mfd. 200V. Paper Condenser
3 .01 mfd. 200V. Paper Condenser
1 .00025 mfd. 500V. Mica Condenser, Red, Green, Brown
2 .0001 mfd. 500V. Mica Condenser, Brown, Black, Brown
1 1500 Ohm 2W. Resistor, Brown, Green, Red
1 150 Ohm ½W. Resistor, Brown, Green, Brown
1 470,000 Ohm ½W. Resistor, Yellow, Violet, Yellow
2 220,000 Ohm ½W. Resistor, Red, Red, Yellow
1 2.2 Megohm ½W. Resistor, Red, Red, Green
1 10 Megohm ½W. Resistor, Brown, Black, Blue
1 22,000 Ohm ½W. Resistor, Red, Red, Orange
1 27 Ohm ± 1% ½W. Resistor, Red, Violet, Black
5 Octal Tube Sockets
1 Dial Cord
1 Dial Tension Spring
1 Volume Control Bracket
1 Loop Bracket
1 Drive Shaft
2 Bakelite Washer ½ O.D. x ¼ I.D. x 1/32
2 Hairpin Spring Clips
1 Insulator
1 Shield
1 Dial Scale
2 Spacer Dowels
1 Dial Light Socket
1 Dial Pointer
1 Power Cord
1 50L6GT Vacuum Tube
1 12SQ7 Vacuum Tube
1 12SK7 Vacuum Tube
1 12SA7 Vacuum Tube
1 35Z5G/GT Vacuum Tube
1 #47 Pilot Light
1 Palnut, ⅜-32
17 Nut, #6-32 x ¼ hex
19 Lockwashers
3 Steel Washer, 9/16 O.D. x .172 I.D. x 1/32
4 Steel Washer, ½ O.D. x .154 I.D.
3 Brass Spacers
3 Rubber Grommet
1 Lug
1 Tie Lug with 2 Insulated Terminals
11 Screw, #6-32 x ¼"
3 Screw, #6-32 x 11/16"
2 Screw, #6-32 x ½"
2 Self Tapping Screw #8 x ⅜"
3 Self Tapping Screw #7 x 1"
1 Self Tapping Screw #6 x 7/16"
3 Self Tapping Screw #6 x ¼"
1 Self Tapping Screw #4 x ⅜"
2 Knobs
2 Felt Washers
1 Speaker Baffle
1 Crystal
11 ft. Black Lead Wire
1 ft. Stranded Yellow Lead Wire
10 ft. Solder
4 in. Black Sleeving

## TUBE LAYOUT

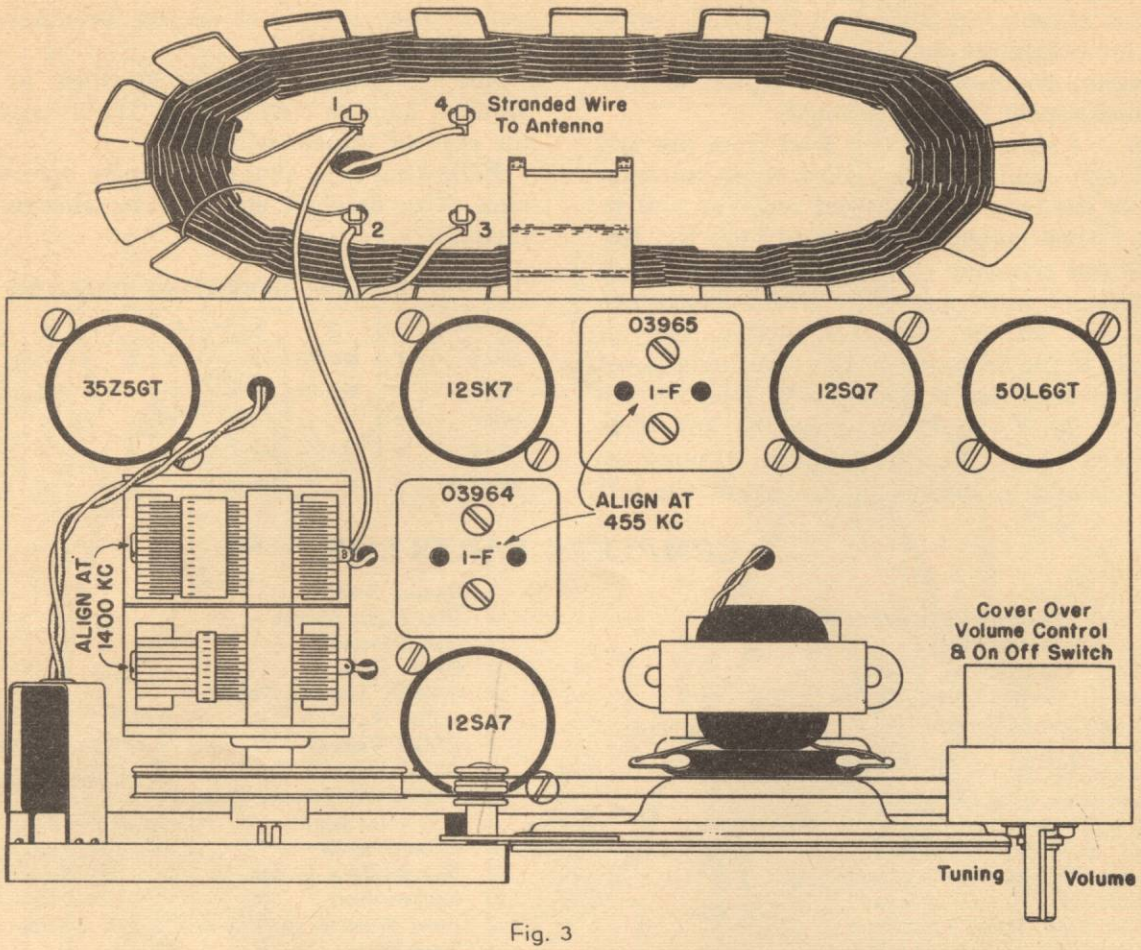


Fig. 3

## 5-TUBE AC-DC SCHEMATIC

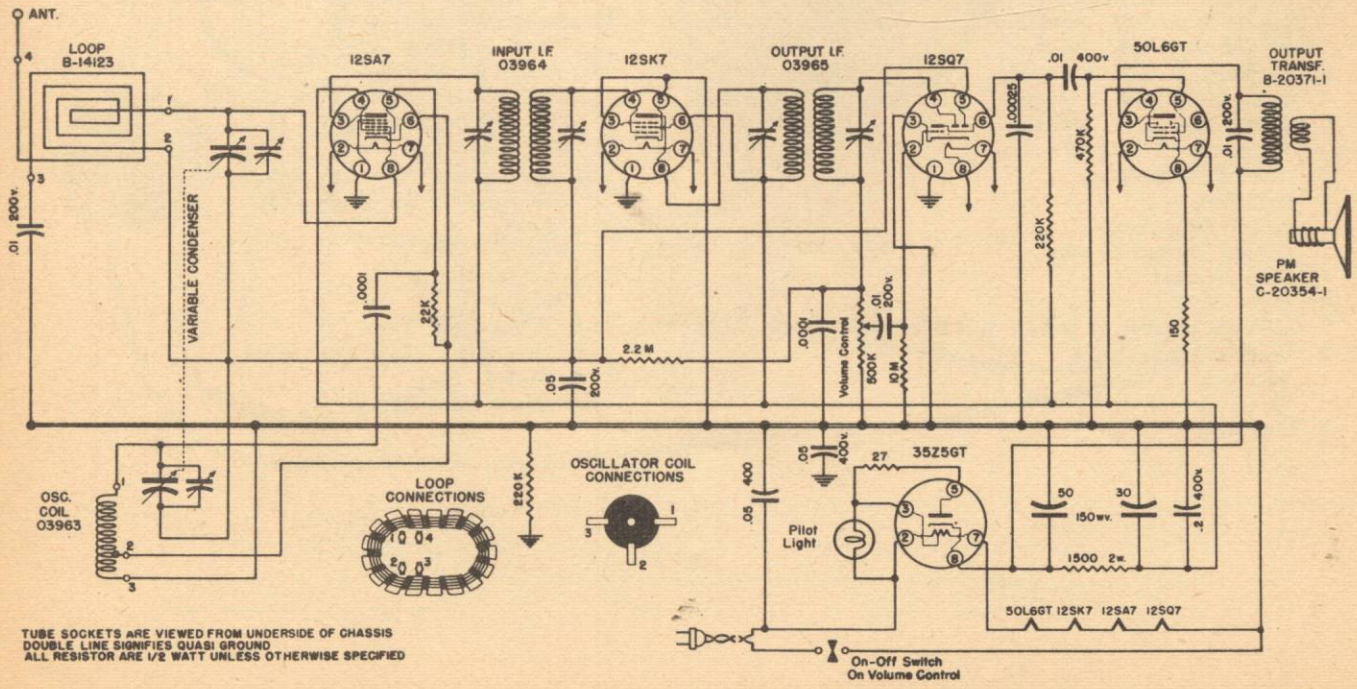

# 5-TUBE AC-DC

PICTORIAL

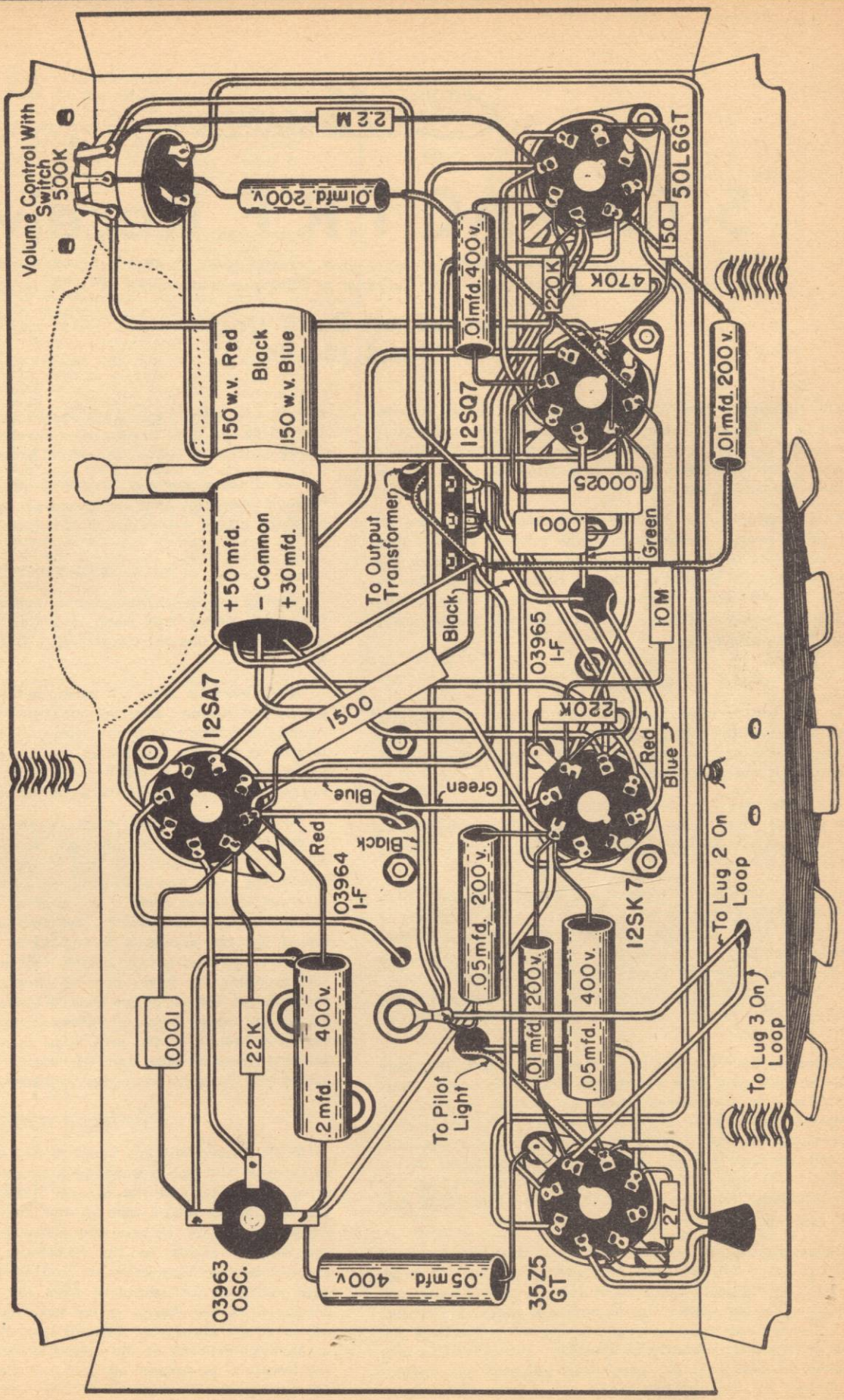

COMPLETE INSTRUCTIONS
FOR CONSTRUCTION AND OPERATION OF THE

Meissner

# 5-Tube AC T.R.F. Receiver

*This receiver is presented in this manual only as a general guide in receiver construction. The essential parts which are available from Meissner or Thordarson are noted by * in the parts list.*

## Broadcast Band Only
## Model 10-1106

The Meissner 5 tube TRF receiver kit No. 10-1106 was designed to fill the requirements for a receiver kit very simple to build yet possessing performance such that it will continue to give satisfying entertainment long after the thrill of successful construction has worn off.

This receiver tunes from 550 KC to 1600 KC and has its own power supply, operating from the 110-volt, 60-cycle line. Two stages of tuned radio-frequency amplification give the receiver adequate selectivity for all purposes except the reception of weak distant stations on frequencies close to that of a local station. It has excellent tone and ample power output for home conditions.

### ASSEMBLY

As the kit is unpacked, all parts should be carefully checked against the Parts List on back of this folder. Any discrepancies should be reported at once to the supplier from whom the kit was purchased.

The parts should be mounted on the chassis in accordance with the top view of the receiver shown on the Schematic Diagram, and the bottom view shown in the Pictorial Wiring Diagram.

Note that the gang condenser is mounted sufficiently high above the chassis, that the leads connected to two of the stator connections under the gang condenser will not be in danger of short-circuiting to the chassis. This elevated mounting can be accomplished by using nuts on the mounting spade-bolts above the chassis as well as below. The condenser, when properly mounted, has its lower edge approximately ¼" above the chassis.

Before beginng the wiring, temporarily install the gang condenser, dial and both controls so that their proper shaft lengths may be determined when the receiver is placed in the cabinet intended for it. Mark the shafts for proper lengths and then remove the controls from the chassis and saw each one with its shaft clamped in a vice. It is advisable not to attempt to cut the shaft of any unit while mounted on the chassis, because the heavy strains imposed on the unit may cause damage thereto.

Mount the sockets, taking care that they are installed in the proper places so that the numbers stamped on them will correctly indicate the type of tube to be inserted. Observe also that the keyway in the socket is properly oriented, lest it become necessary to remove all of the wires from the socket if it is later found to be reversed. It is advisable also to solder at least one spot (preferably adjacent to a mounting screw) on each socket saddle to chassis, since many ground connections are made to the lugs on the saddle, and trouble due to poor contact may develop unexpectedly unless a permanent good contact is insured by soldering.

Install the power transformer by means of the nuts shipped thereon, observing that the terminals on the transformer are properly placed according to the Pictorial Diagram.

### WIRING

Having completed the assembly operations described above, the actual wiring may start, observing the suggestions given on the sheet "General Construction Hints" packed with each Kit.

After bending down all socket-saddle ground-lugs not required for wiring, wire the filament circuit complete. The remaining wiring may be installed in any convenient sequence. It will be found a great help in wiring if each wire in the Pictorial Diagram is marked over with a colored pencil as the corresponding wire in the set is installed.

Note that grid leads must be attached to each coil by threading the lead down through the hole in the top of the coil can and attaching the lead to the proper lug at the bottom of the coil. The coils need not be removed from the can in order to attach leads. The antenna coil, mounted closest to the front of the receiver, has two leads run through the top of the can attaching to the lug at the bottom whereas, the other two, although having two leads attached to the corresponding lug have only one through the can, the other crossing the bottom of the chassis to the bottom of the gang condenser. Small pieces of rubber tubing are provided to slip over the shanks of the grid clips so as to prevent contact between these shanks and the metal shield caps that are placed over the grids to prevent oscillation.

### VOLTAGE TEST

If all connections are found to be correct, the tubes may be inserted and the line-cord plug connected to a 110-volt, 60-cycle receptacle, and the speaker (1500- to 2000-ohm field) plugged in. A slight turn of the tone-control knob to the right will turn on the receiver. After a brief warm-up period the voltages shown on the Schematic Diagram should be checked with a high-resistance voltmeter, if available. Voltages indicated are measured from the point shown, to the chassis, with the chassis as the negative terminal. If values measured are materially different than shown on the diagram, a thorough recheck of the circuit should be made. **Be sure the receiver is turned off and the line-cord disconnected from the power receptacle while the wiring is being checked.**

### ALIGNMENT

Set the dial so that the pointer is horizontal when the gang condenser is completely closed.

Connect a service oscillator or signal generator to the radio set using a 200-mmf condenser between the antenna post of the receiver and the high side of the signal generator to act as a dummy antenna. Turn the volume control on full, set the dial at approximately 15, turn up the output of the signal generator and tune it until a signal is heard. Adjust the trimmers on top of the gang condenser for maximum signal, reducing the generator output as the receiver becomes progressively more sensitive. If oscillation (signal or whistle) results, retard the volume control until oscillation ceases. Oscillation is usually evidence that the receiver was not wired accurately according to the Pictorial Diagram, which has been prepared to avoid such troubles. Check the wiring of antenna lead and all grid and plate leads associated with the 6K7 and 6J7 tubes to see that these leads are placed as shown in the diagram.

### ALIGNMENT WITHOUT TEST EQUIPMENT

If no test equipment is available, connect an outside aerial to the receiver, advance the volume control to maximum and tune in a local station between 1400 and 1500 KC, adjusting the trimmer condensers on the gang condenser, retarding the volume control as the receiver becomes progressively more sensitive, using always a small output signal because more accurate alignment can be made with a weak signal.

---

*Only those parts followed by * are available from Meissner or Thordarson.*

## Parts Supplied for Construction of 5-Tube AC TRF Receiver

**MODEL 10-1106**

1 Dial and Escutcheon
1 Set of No. 2 Screws, Nuts and Lockwashers
2 6.3-volt Dial lights
1 Antenna Coil No. 14-1004 *
2 RF Coils No. 14-1005 *
1 3-gang 365-mmfd. Tuning Condenser Parts 21-5215 *
1 Condenser Shield
1 Power Transformer, Thordarson T24R02 *
5 Molded Bakelite Octal Sockets
1 4-prong Wafer Socket for Speaker
1 Ant.-Gnd. Terminal Strip
1 25,000-ohm Tone Control with Switch
1 10,000-ohm Volume Control
1 Line cord and plug
1 300-ohm, ¼-watt resistor
1 400-ohm, 1-watt resistor
1 40,000-ohm, 1-watt resistor
1 50,000-ohm, 1-watt resistor
1 50,000-ohm, ¼-watt resistor
1 250,000-ohm, ¼-watt resistor
1 500,000-ohm, ¼-watt resistor
1 2-megohm, ½-watt resistor
1 .0005-mfd. Mica Condenser
1 .006-mfd., 600-volt Paper Condenser
1 .01-mfd., 400-volt Paper Condenser
2 .05-mfd., 400-volt Paper Condenser
3 .1-mfd., 200-volt Paper Condensers
2 .1-mfd., 400-volt Paper Condensers
1 10-mfd., 25-volt Dry Electrolytic Condenser
2 8-mfd., 450-volt Dry Electrolytic Condenser
1 ⅜" Rubber Grommet
2 ¼" Rubber Grommets
3 Metal tube Grid Shields
3 Metal Tube Grid Clips
3 1" Black Bakelite Knobs
3 8-32x¼" long RH Brass Screws
30 6-32x¼" Hexagon Steel Nuts
20 6-32x¼" long RH Steel Screws
27 No. 6 Lockwashers
3 Tie Lugs, one insulated terminal
1 Tie lug, two insulated terminals
1 Shakeproof Soldering lug
1 Length No. 20 Shielded wire
1 Length Spring Shielding
1 Length No. 20 Solid hook-up wire, Red
1 Length No. 20 solid hook-up wire, Black
1 Length No. 20 solid hook-up wire, Blue
1 Length No. 20 solid hook-up wire, Yellow
1 Length No. 20 solid hook-up wire, Orange
1 Length No. 20 Solid hook-up wire, Brown
1 Length No. 20 solid hook-up wire, Green
1 Length No. 20 stranded wire, Green
1 Length Black insulating sleeving
1 Length Rosin core solder
1 Length Rubber tubing
1 Punched steel chassis 7" x 9" x 2", 11-8230

To use P.M. Speaker use 6 inch 3.2 ohm (Jensen P6-X or equivalent) and substitute Thordarson T20C59 * filter choke in series with 1500 ohm 10 watt resistor instead of the speaker field. Use Thordarson T-22S46 * output transformer.

### ADDITIONAL PARTS REQUIRED FOR OPERATION

2 6K7 Metal Tubes
1 6J7 Metal Tube
1 6F6 Metal Tube
1 5Y4G Octal base Glass Tube
1 Dynamic Speaker with 4-prong plug; 1500- to 2000-ohm field resistance; output transformer to match single 6F6; power handling capacity, 5 watts minimum.

Note: No Panel or Cabinet is available for this receiver.

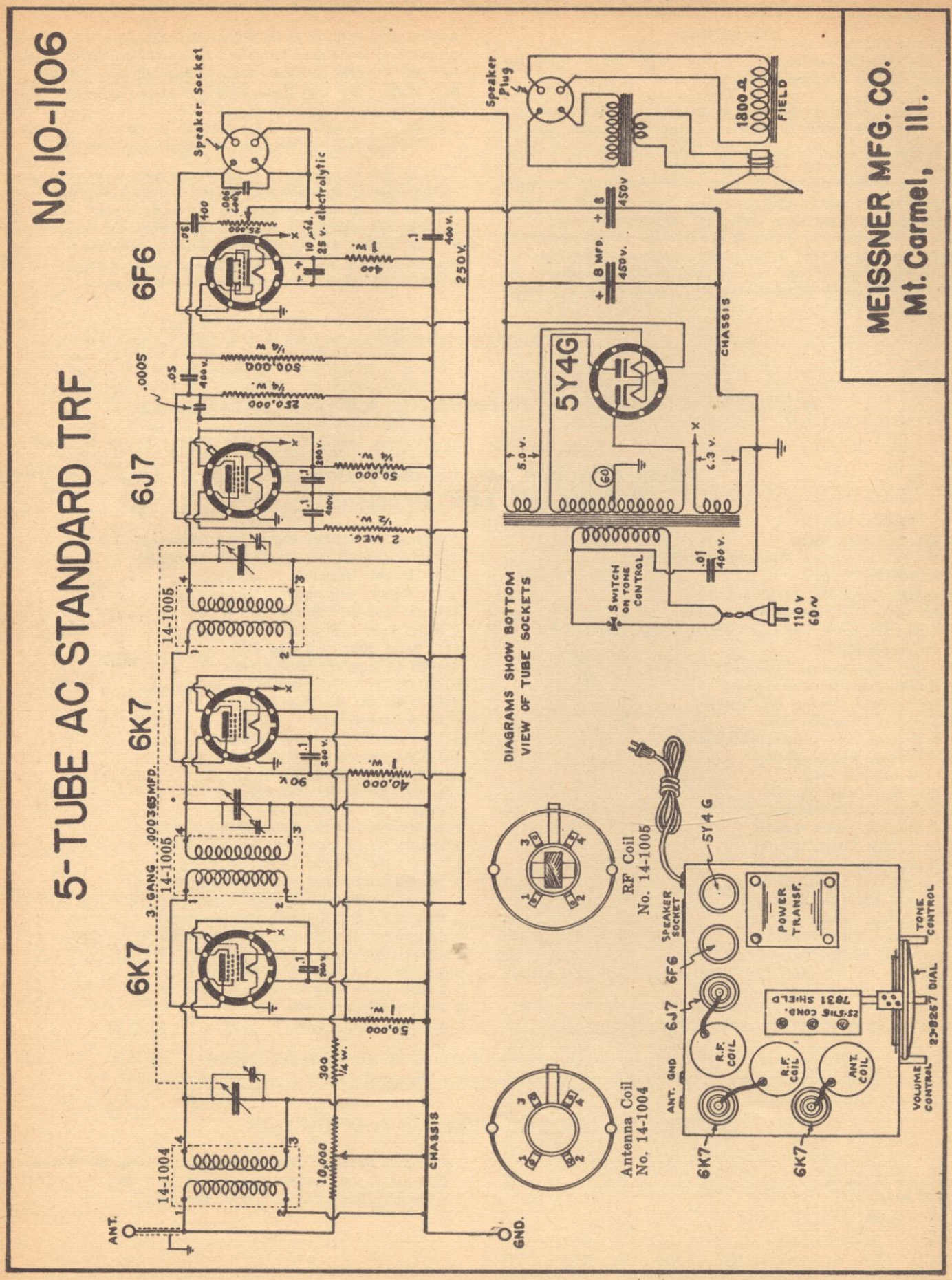
No. 10-1106
5-TUBE AC STANDARD TRF
MEISSNER MFG. CO.
Mt. Carmel, Ill.
6F6
6J7
6K7
6K7
5Y4G
Speaker Socket
Speaker Plug
1800-Ω FIELD
CHASSIS
250V.
3-GANG .0003 MFD.
14-1004
14-1005
14-1005
ANT.
GND.
DIAGRAMS SHOW BOTTOM VIEW OF TUBE SOCKETS
SWITCH ON TONE CONTROL
110 V 60 ~
RF Coil No. 14-1005
Antenna Coil No. 14-1004
POWER TRANSF.
SPEAKER SOCKET
ANT. GND
R.F. COIL
ANT. COIL
7831 SHIELD
TONE CONTROL
DIAL
VOLUME CONTROL

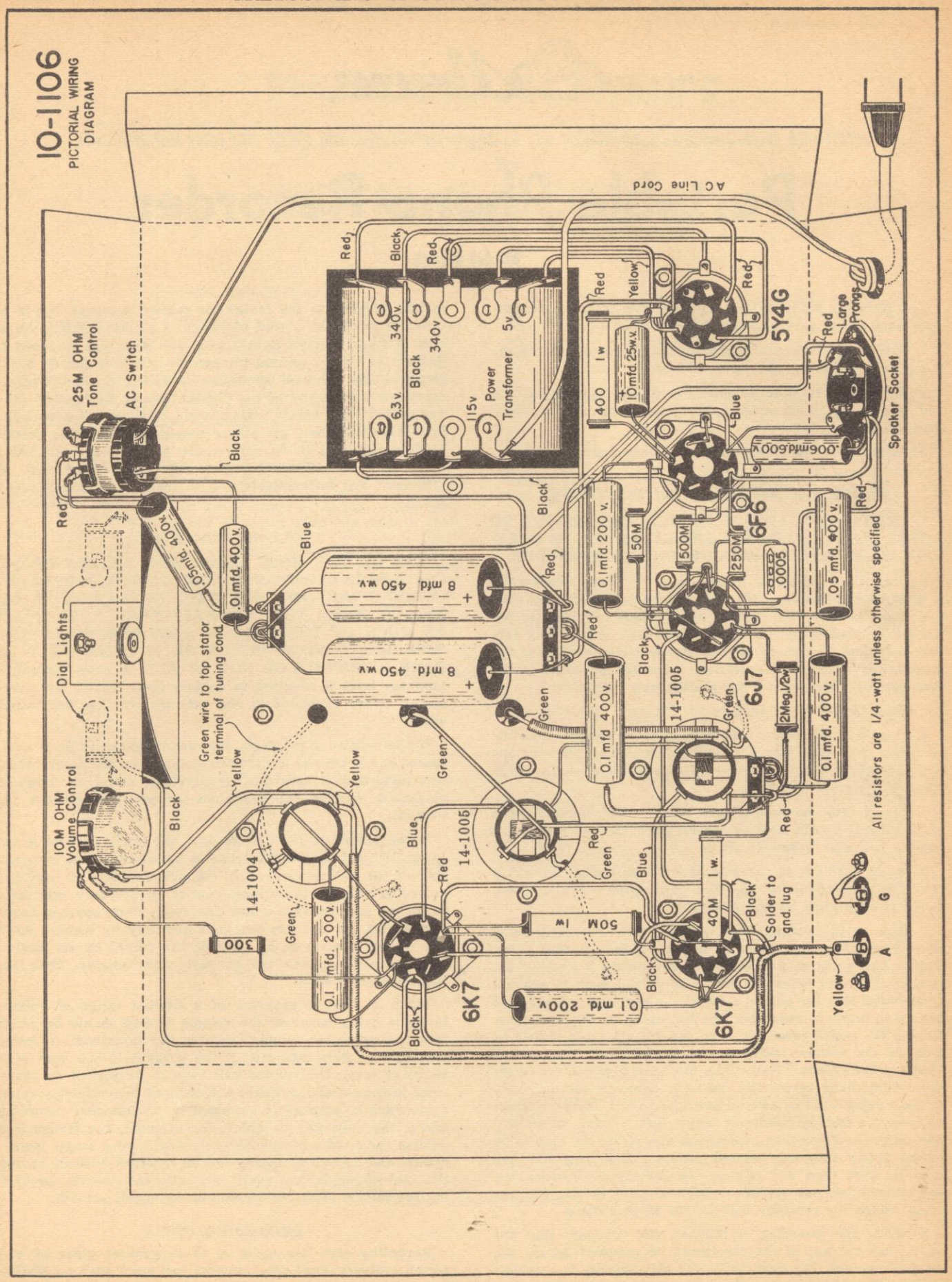
10-1106
PICTORIAL WIRING DIAGRAM
25M OHM Tone Control
AC Switch
10M OHM Volume Control
Dial Lights
.05mfd. 400v.
.01mfd. 400v.
8 mfd. 450 w.v.
8 mfd. 450 w.v.
Green wire to top stator terminal of tuning cond.
14-1004
14-1005
14-1005
6K7
6K7
6K7
6J7
6F6
5Y4G
Power Transformer
6.3v.
115v
340v.
340v
5v
AC Line Cord
Speaker Socket
Large Prongs
10 mfd. 25w.v.
400 1w
.006mfd.600v
0.1mfd. 200 v.
50M
500M
250M
.0005
.05 mfd. 400 v.
0.1 mfd 400v.
2Meg.1/2w
0.1 mfd. 400 v.
0.1 mfd. 200v.
300
50M 1w
40M 1w.
Solder to gnd. lug
All resistors are 1/4-watt unless otherwise specified
Red
Black
Yellow
Blue
Green
G
A

COMPLETE INSTRUCTIONS FOR

Meissner

*This unit is presented in this manual only as a general construction guide. No parts are available.*

# Portable Phono Recorder

**Model 9-1045**

The Meissner Model 9-1045 Portable Recorder is a tri-purpose device that performs the following functions:

1. Cuts "Instantaneous Recording" phonograph records using a microphone to pick up the sound.

2. Electrically reproduces phonograph music playing standard records up to 12 inches and "Instantaneous Recording" discs up to 10 inches.

3. Serves as a low-power Public Address System.

## How to Make a Recording

1. IMPORTANT—ADJUST CUTTER ARM HEIGHT TO AGREE WITH STYLUS LENGTH EMPLOYED. SEE SECTION "PRELIMINARY ADJUSTMENT OF RECORDER."

2. Turn on the recorder by rotating the "Tone Control" in a clockwise direction until the switch snaps on and the pilot light jewel is illuminated. Allow about two minutes for the tubes to warm up. Do not turn the tone control any farther than just enough to turn on the amplifier as this is the most faithful recording condition. Advanced positions of the tone control are primarily for phonograph operation.

3. Turn the control switch to the "Record" position.

4. Plug the microphone connector into the receptacle in the recorder. Note that this plug will go in the socket only one way. Do not attempt to force it, because it goes in easily when in the proper position.

5. Speak into the microphone in a normal tone of voice while turning up the volume control until the "normal" neon volume indicator begins to flash.

6. Touch a finger to the side of the stylus while speaking into the microphone to see that the stylus vibrates when sound is impressed on the microphone.

7. Pick up the cutting head, swing it over the record and lower it gently onto the record at the desired starting point. Permit two or three grooves to be cut before beginning the recording so that when the record is played back it will not be essential that the pickup start at the beginning of the first groove in order to reproduce the beginning of the recording. During the entire recording very careful attention should be paid to the volume indicators as explained in the section "Volume Indicators." Note: The mechanism which traverses the cutting head across the record is engaged automatically as the cutting head is lowered onto the record. Never attempt to force the cutting head side ways. Lift it first, which will disengage the cross-feed mechanism and allow the arm to be swung freely into any desired position. Lowering the arm onto its rest does not engage the cross-feed because the mechanism does not operate at such a great radius. For the same reason the recorder will not cut 12 inch discs.

8. When the recording is finished, the "thread" that the stylus has cut out of the disc must be removed before the record is played. The best device for this purpose is a camels hair brush with which the thread is "picked up" rather than merely brushed to the center for manual removal, but if no brush is available, a wad of cotton, a piece of soft cloth or even a finger drawn lightly over the disc may be used to gather the thread around the spindle where it can be easily removed. The "thread" should be deposited in some fireproof container since many of the "Instantaneous Recording" discs are coated with highly inflammable cellulose nitrate (celluloid) although there are others coated with cellulose acetate (safety film) which do not require such precautions, but it is a very wise operating procedure to assume that all "threads" are inflammable and to dispose of them accordingly.

### VOLUME INDICATORS

ONE OF THE MOST IMPORTANT PHASES OF RECORDING IS CLOSE ATTENTION TO THE PROPER RECORDING VOLUME. THE BEST OPERATION IS OBTAINED WHEN THE "NORMAL" NEON BULB IS LIT AS MUCH OF THE TIME AS POSSIBLE WHILE THE "OVERLOAD" NEON INDICATOR FLASHES ONLY AT RARE INTERVALS OR NOT AT ALL. A close control of program level is required to achieve such results but every bit of effort expended in the attempt will be well worth while.

If the volume is too high, the recording amplifier is overloaded and impresses a distorted program on the record. Once this distortion is recorded, no playback amplifier, however perfect it may be, can reproduce the program without distortion.

If the recording level is too low, the surface noise is exaggerated and the playback has to be made with a high setting of the volume control. In the extreme case of very low recording volume, the volume control on playback may have to be set so high that a low frequency "microphonic howl" may be set up that can be eliminated only by turning down the volume control or by playing the record on an electric phonograph that has the speaker well isolated from the turntable and pickup.

When a musical program of a limited range of volume levels is being recorded, the volume control should be set so that the maximum volume operates the "overload" indicator only at very rare intervals. If the program has a very wide range of level, the volume will have to be turned up somewhat in the softest passages and reduced in the loudest passages. Such a practice is standard in professional recording and is the only way in which, for example, the tremendous volume range of a symphony orchestra from a single instrumental solo to full orchestra can be recorded without having the loud passages "cut over" into adjacent grooves, or having the softest passages covered up by needle scratch.

### RECORDING STYLI

Recording styli are made of three general types of material, ordinary hard steel, special tool steel such as Stellite or equivalent, or they may be made of the still harder ma-

terial, sapphire. When examples of all three types of styli are in good condition, it can usually be demonstrated that the steel styli, either regular steel or tool steel, produce about equal surface noise, while the sapphire stylus will usually produce less.

The advantage of the special alloy steel stylus over the regular steel stylus is longer playing life, but this is accomplished at a sacrifice in ability to withstand abuse. The same thing applies to sapphire styli only to a much greater extent because the sapphire is quite brittle and can easily be chipped.

The two accidents most likely to damage a stylus are:

(1) Dropping the cutting arm so that the stylus strikes some surface thereby chipping or breaking the stylus.

(2) Cutting through the record coating into the base material.

The latter may be caused by poor quality or damaged records, either by cutting through thin spots that may exist, or by digging in after the stylus has been thrown off of the record surface by bumps or hard spots.

From the foregoing, it seems that in general home recording service, especially if the equipment may be handled by many people, as at parties, amateur dramatics, amateur concerts etc. it is more economical to use good quality regular steel styli that can be discarded without regret if accidentally damaged, rather than to invest in a supposedly long-lived, high-priced stylus, whose life expectancy may be greatly shortened by the careless act of some well meaning but uninformed person.

## RECORD BLANKS

"Instantaneous Recording" phonograph discs are comparatively new and consequently their manufacture is far from being standardized. There are good records and poor records. The only rule for selection is that of experience, either personal or that of your dealer. The record that performs best for you on your recorder is the best for you to use. Concentrate on that particular brand if you wish to produce consistently good recordings.

The most important characteristics of a record are listed below to be used as a guide in comparing and selecting records:

1. The blank should cut a clean shiny groove and produce a continuous thread. Records which produce a rough and dull looking groove, or which powder the material cut out of the groove, or which break the thread up into many pieces, or that produce a "sticky" thread, are not good records.

2. The "needle scratch" should be low. Generally the record producing the smoothest looking groove will give the lowest needle scratch, but a more reliable method of testing is to cut a few blank grooves at the same radius with the same stylus on each of the records to be compared, and then to play them successively **with the same setting of the volume control for all records**, selecting the one producing the least volume of scratch, provided that its other characteristics are acceptable.

3. "Rumble" is produced on some records having very flexible base materials. This is especially true of paper records. It is almost axiomatic that if a high quality recording is desired a paper (or other very flexible) base record should not be used, however, because of the economy that such discs offer they probably will enjoy the maximum volume of sale.

4. The "ageing" characteristics of records is a factor influencing the production of consistently good recordings but is somewhat difficult for the home recordist to check unless he is on the lookout for such differences and is a keen observer. Some records cut beautifully at a certain age and less well both before and after that time. Others cut well only when relatively fresh, while still others will not cut well until they have aged some time. This ageing characteristic may explain why a certain make of record may give excellent results at one time and not at another.

5. High Frequency Response is a characteristic in which wide variation can be expected. The variation between some makes of records is so great that only the most casual listening test is required to distinguish the record with good high-frequency response from that with poor high-frequency response. Such a test should, of course, be made with the same stylus, the same type of program, and the same type of playback needle. Preferably the test should be made with live program material having a reasonable percentage of high-frequency notes. If the program is obtained from the radio, the tuning should be adjusted to produce a reasonable percentage of high notes and should not be changed between the several test runs because the tuning of most sets has a considerable influence on the high-frequency response thereof.

6. Groove depth should be uniform. If there is any great difference in cutting depth a definite "pattern" will be evident on the record and the variable load on the motor will tend to produce a "wow" or unsteadiness in tone.

## PROGRAM PLANNING

Spontaneous, unplanned recordings can frequently be very amusing, especially at a party or other social gathering, but for records to have lasting interest they should be planned.

The first step in planning a record is the one most easily overlooked until several unsatisfactory records have drawn this step to the attention of the recordist. This step is to plan the program material to fit the recording time available on a given record. Either select a record size large enough that you are sure the program will fit, or else **time the program material to see if it will fit.** The playing time of the Meissner 9-1045 recorder is

| Record Size | Time |
|---|---|
| 10 inch | 3½ minutes |
| 8 inch | 2¼ minutes |
| 6 inch | 1 minute |

Give the program breathing space on the record. There should be a few blank grooves at both the start and at the finish of the program, just as every printed page has some margin all around the text. These few uncut grooves give a much more finished and more professional touch to the record than one that misses the first few words and cuts off the last word in the middle of a syllable. Careless, unplanned recordings of this type soon become tiresome, whereas well planned and carefully made records are a joy to be treasured through the years.

Planning a record of a small child's voice and "cute saying" is virtually impossible if the youngster is expected to make the recording unaided, but if a conversation between the child, and an older child or an adult is recorded, the younger child's thoughts can be guided and stimulated, long periods of silence avoided which would otherwise be sure to occur, and the recording can be appropriately terminated at the proper time.

The first time an adult is invited to make a recording the frequent reply is "What will I say." The interview technique is a very convenient way of helping the novice to "gather his wits" and to make a record with which he may be pleased or amused rather than embarassed by the awkward pauses that might otherwise occur, while he, unaided attempted to think of appropriate remarks to make.

### PRELIMINARY ADJUSTMENT OF RECORDER

1. Place on the turntable an uncut record of the type that is to be used for recording.

2. Place stylus in the cutting head. Insert it as far as it will go, rotate it until the long flat on the shank of the stylus faces the stylus screw, then firmly tighten the screw.

3. Raise the cutter arm well up from its rest, swing it over the record and carefully lower it so that the stylus rests on the record near the center (which should not be revolving). Observe the position of the stylus screw in the slot in the cutter arm. If the screw is approximately in the middle of the slot no adjustment of the cutter arm height is required, but if the stylus screw is close to either the top or the bottom of the slot the arm should be adjusted in the following manner:

(a) Lift the cutter arm into a vertical position. Underneath the arm will be found a machine screw on which the arm rests. The adjustment of this screw is preserved by a lock nut. Loosen the lock nut and rotate this screw until the stylus screw occupies the center position in the slot when the cutter arm is in the recording position, then tighten the lock nut and again check the position of the stylus screw to see that the adjustment has not been seriously disturbed by tightening the lock nut.

(b) Cut a few blank grooves (volume control at zero) while watching the stylus screw to see that as the record revolves, the stylus screw does not approach either end of the slot. If this condition holds true, the height of the cutter arm is properly adjusted until a new stylus is used having a length a great deal different than the stylus used in the original adjustment, or unless records of a new thickness are used that are sufficiently different from the original records to require readjustment of cutter arm height. NEVER ATTEMPT TO MAKE A RECORDING WHEN TWO OR MORE DISCS ARE ON THE TURN TABLE SIMULTANEOUSLY.

If the normal position of the screw is too high, the entire weight of the cutting arm is placed on the stylus when the stylus screw hits the top of the slot. This heavy weight will cause the stylus to dig into the record base and ruin at least the record and, in all probability, the stylus as well. If the stylus is a sapphire it probably will be broken so badly that it cannot be resharpened.

If the stylus screw strikes the bottom of the slot, the normal cutting pressure is removed from the stylus which will cut light or perhaps may be lifted entirely clear of the record, and may make no groove at all for a fraction of a revolution of the record.

### CUTTING PRESSURE

Variation in the hardness of different record coatings may require different cutting pressures for different makes of records.

The normal depth of cut produces a width of groove approximately equal to the width of the uncut portion left standing between grooves. Examine the blank grooves cut during the preliminary adjustment to see whether they approach this condition. If not, the adjusting screw exposed through the top of the cutting arm can be changed quite easily to accomplish the desired result. If the cut is too light, the playback needle may not "track" and may jump out of the groove and scratch across the record. If the cut is too heavy the stylus may cut over into the adjacent groove on loud notes, or in cutting one groove, the stylus may push some of the wall material into the previously cut groove producing what is called an "echo", although when played back the "echo" precedes rather than follows the normally recorded sound.

The most common error in adjusting cutting pressure is making the cutting pressure greater than necessary, which increases the wear on the stylus, increases echo, and increases the difference in speed between recording and playback.

## Service Notes for Professional Servicemen

The Meissner 10-1045 Portable recorder uses no power transformer, and has one side of the power line connected to chassis as in many AC/DC sets. Use the same caution in working on this amplifier as in working on AC/DC sets.

The filaments are connected in series. A ballast tube is used to make the total filament voltage equal to the line voltage (117 average).

A voltage-doubling rectifier circuit is employed to obtain adequate voltage for the power tube. The circuit is of such type that the negative "B" and "negative" side of the line can be connected together.

The voltages that exist in a normal amplifier are shown in the accompanying table. All voltages are measured to chassis.

The pilot light is rated at 115 volts, 7 watts, and is connected across the line after the line switch. It is independent of the tube filament circuit. Replacements can be obtained at almost any 5 & 10 Cent Store or electric supply house since this bulb is popularly used in night-lights.

The microphone cable shield is connected to the chassis to prevent hum. It is insulated throughout its length and **does not connect to the microphone shell.**

The phonograph pickup is isolated by a .1-mfd. 400 volt condenser in its ground side. The mounting screws for the amplifier are insulated from the chassis if the heads are exposed where they can be touched.

The neon volume indicators are GE T-2 neon lamps.

### NORMAL OPERATING VOLTAGES

**On Tube Socket Terminals Designated by RMA Number**

| TUBE | 1 | 2 | 3 | 4 | 5 | 6 | 7 | 8 |
|---|---|---|---|---|---|---|---|---|
| 6Q7GT | 0 | 0 | 85 | 0 | 0 | 180 | 6.3 AC | 0 |
| 6SQ7GT | 0 | 0 | 0 | 0 | 0 | 80 | 6.3 AC | 12.6 AC |
| 25L6GT | NC | 37.6 AC | 185 | 105 | 0 | NC | 12.6 AC | 8 |
| 25Z6GT | NC | 62.6 AC | 110 | 215 | -0.7 | NC | 37.6 AC | 115 |
| L55B | NC | NC | 62.6 AC | NC | NC | NC | NC | 117 AC |

NC indicates "No Connection"; all voltages indicated are positive with respect to chassis unless otherwise marked.

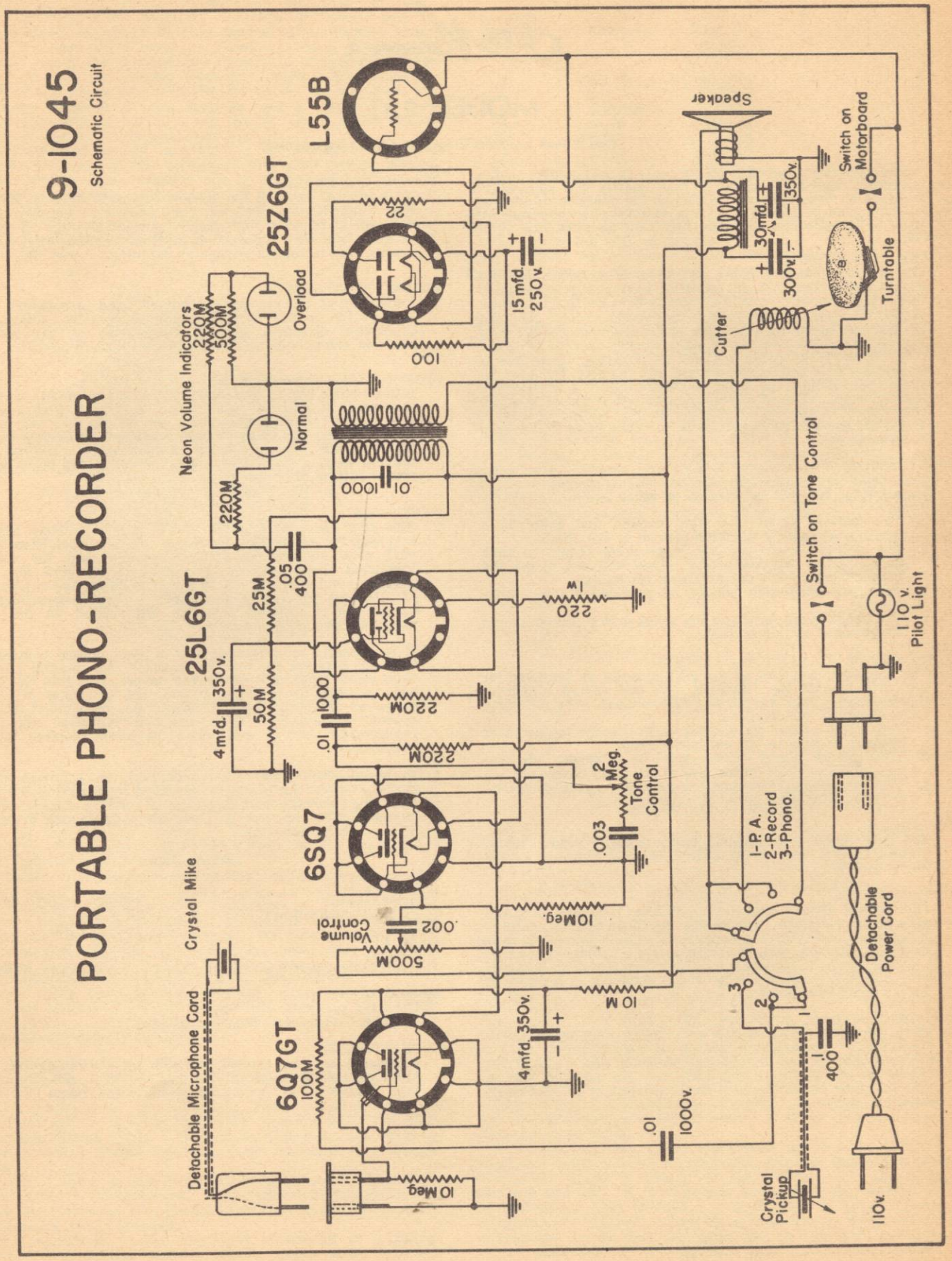
9-1045
Schematic Circuit
PORTABLE PHONO-RECORDER
L55B
25Z6GT
25L6GT
6SQ7
6Q7GT
Speaker
Switch on Motorboard
Turntable
Cutter
Neon Volume Indicators
Overload
Normal
220M
500M
22
100
15 mfd. 250 v.
30 mfd.
350v.
300v.
.01
1000
25M
.05
400
4 mfd. 350v.
50M
220
1w
220M
.001
.01
2 Meg. Tone Control
.003
10 Meg.
.002
Volume Control
500M
10 M
4 mfd. 350v.
100M
.01
1000v.
Switch on Tone Control
110 v. Pilot Light
1-P.A.
2-Record
3-Phono.
Detachable Power Cord
400
Crystal Pickup
110v.
Crystal Mike
Detachable Microphone Cord
10 Meg.

# INSTRUCTIONS FOR USE AND OPERATION OF THE

Meissner

# MODEL 8BT

*This Tuner available from your Local Distributor.*

The Meissner Model 8BT AM-FM tuner is designed for custom installations requiring a tuner of high quality and superlative performance at moderate cost. Although the designer of such an installation must be guided to a large extent by the requirements of such an installation, the following general hints may prove helpful.

POWER AMPLIFIER

The output impedance of the 8BT tuner is 220,000 ohms and should be worked into an amplifier having high impedance input. High impedance amplifiers usually have an input impedance of 500,000 ohms, but some have a lower impedance than this, and the 8BT may be worked into an impedance as low as 250,000 ohms with no appreciable loss of low frequencies or increase in distortion. An amplifier having provision for phonograph input from a crystal pickup is satisfactory for use with the 8BT, but under no conditions should the 8BT be worked into a microphone input channel. The relatively high output of the 8BT would cause overloading and distortion in the microphone input stage and the hum level would be too high to be considered acceptable.

THE CABINET

The following notes are based on a console cabinet installation, but will apply also to other types of installations:

1. The cabinet should be rigid enough that there is a minimum of cabinet vibration caused by the speaker.
2. The location of the speaker or speakers should be such that directly radiated sound waves will not strike the tuner chassis or the record player mechanism.
3. Adequate ventilation should be provided for the tuner chassis.
4. The baffle board on which the speaker is mounted should be as heavy as is practical.

THE RECORD PLAYER (OR CHANGER)

The phonograph system of the 8BT chassis is designed for use with crystal type pickups, and any record player or changer having this type pickup may be used. The following notes should be observed:

1. The record player frame must be connected to the tuner chassis in order to prevent hum pickup.
2. The record player motor may be plugged into the convenience outlet on the rear of the tuner chassis.
3. The connecting lead from the pickup cartridge must be provided with a miniature phonograph plug.

CONTROLS

The front panel controls are, left to right: Tone Control, Volume Control and On-Off Switch, Tuning Control, AM-FM Phono Switch.

TONE CONTROL

This control affects both treble and bass response so that a wide tonal variation is available to fit individual listener preferences and receiving consitions. The bass response is maximum with this control in the extreme counter-clockwise position and is reduced as the control is turned in a clockwise direction until maximum treble response is reached in the full clockwise position.

VOLUME CONTROL, AC ON-OFF SWITCH

As this control is rotated from its extreme counter-clockwise position, it actuates the switch to supply power to the receiver chassis and the phonograph motor which is connected to the AC outlet on the chassis. The speaker volume will increase as this control is turned further in clockwise direction.

TUNING CONTROL

This control is used for station selection on both AM and FM. When tuning stations, care should be taken that the receiver is tuned on the station and not slightly off to one side as this will introduce distortion. This control should not be used to reduce volume by detuning.

AM-FM PHONO SWITCH

Reception of the standard broadcast band is obtained with this switch in full counter-clockwise position, rotation in clockwise direction gives FM reception on the second position and phonograph operation on the third position.

PRECAUTION ON TUNING FM

A three point tuning characteristic is typical of this type FM receiver. It will be noted that FM signals from a given station are received at three points on the dial very close to each other; two of these points will be noticeably weaker than the third, which is much stronger and located between the two weak points. The strong center tuning point is the proper setting of the receiver.

ANTENNAS

The 8BT chassis is provided with high efficiency built-in antennas for AM and FM reception. In most localities these will give entirely satisfactory results; but for use in localities where built-in antennas do not give the best results, provision is made on the chassis for the connection of AM and FM outside antennas. The instructions for connection of outside antennas are printed on the loop antenna frame.

It is strongly recommended that a good ground connection be made between the receiver chassis and external ground. Cold water pipes or a rod driven several feet into the earth may be used for external ground, but hot water or steam pipes or electrical conduit should not be used. A good ground connection will do much to minimize electrical interference, and is well worth the effort required for its installation.

In installations where space permits, an improvement in signal to noise ratio may be obtained by removing the loop from the chassis and mounting it on the inside of the cabinet. The leads to the loop are long enough to permit this type of installation.

Service Data

GENERAL

| | |
|---|---|
| Power Supply | 110-120 V 50-60 cycles |
| Power Consumption | 40 watts |
| Output | 1 to 15 volts |
| AM I.F. | 455 kc. |
| FM I.F. | 10.7 mc. |

Replacement part numbers - as shown on schematic diagram.

AM ALIGNMENT

I.F. 455 kc.

Align Ant. and Osc. Trimmers at 1400 kc.

FM ALIGNMENT

Alignment may be carried out with an unmodulated R. F. signal generator covering 10.7 mc. and 88 to 108 mc. and a high impedance DC voltmeter having a low range of 1 to 5 volts DC.

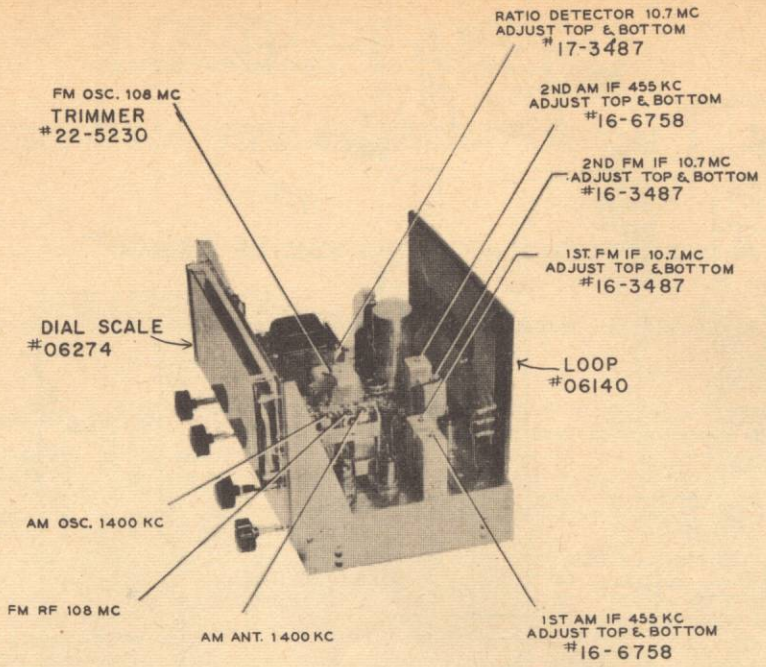


LOCATION OF TUNING ADJUSTMENTS

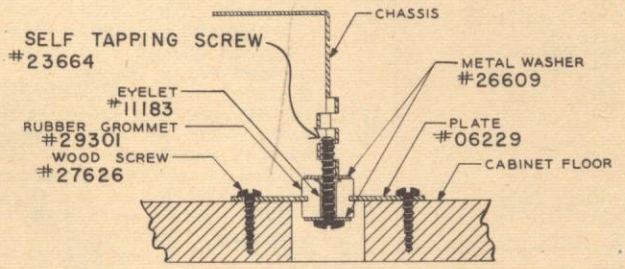


DETAIL OF RUBBER MOUNTING

**RESISTANCE CHART 8BT**

| TUBE | PIN NUMBER 1 | 2 | 3 | 4 | 5 | 6 | 7 | 8 | 9 |
|---|---|---|---|---|---|---|---|---|---|
| 6AB6 FM RF. . . . . | 0 | 0 | 0 | 0 | 500K* | 500K* | 68 | | |
| 12AT7 FM Conv. Osc.. . . . . | 500K* | 10K | 0 | 1 | 1 | 500K* | 0 | 560 | 0 |
| 6BE6 AM Conv. Osc. . . . . | 22K | 0.5 | 0 | 0 | 500K* | 500K* | 2.5M | | |
| 6BA6 IF. . . . . | 1M | 0 | 0 | 0 | 500K* | 500K* | 68 | | |
| 6BA6 FM Driver. . . . . | 0.5 | 0 | 0 | 0 | 500K* | 500K* | 68 | | |
| 6AL5 Ratio Det. . . . . | 6.8K | 6.8K | 0 | 0 | Inf. | Inf. | Inf. | | |
| 6AT6 Det. RF. . . . . | 10M | 0 | 0 | 0 | 1.5M | 500K* | 500K* | | |
| 6X5GT Rectifier . . . . . | 0 | 0 | 270 | Inf. | 270 | Inf. | 0 | 500K* | |

* Subject to variation depending on condition of filter condensers. Reading on 6BA6 FM RF and 12AT7 with switch in FM pos.
K 1000 M 1,000,000

**VOLTAGE CHART**

| TUBE | PIN NUMBER 1 | 2 | 3 | 4 | 5 | 6 | 7 | 8 | 9 |
|---|---|---|---|---|---|---|---|---|---|
| 6BA6 FM RF. . . . . | 0 | 0 | 0 | 6.3AC | 57 | 97 | 1 | | |
| 12AT7 FM Conv. Osc.. . . . . | 106 | Sl. Neg. | 0 | 6.3AC | 6.3AC | 104 | 0 | 1.2 | 0 |
| 6BE6 AM Conv. Osc. . . . . | 6.8 | 0 | 0 | 6.3AC | 96 | 96 | Sl. Neg. | | |
| 6BA6 IF. . . . . | Sl. Neg. | 0 | 0 | 6.3AC | 108 | 108 | 1 | | |
| 6BA6 FM Driver. . . . . | 0 | 0 | 0 | 6.3AC | 102 | 102 | 1 | | |
| 6A15 Ratio Det. . . . . | Sl. Pos. | Sl. Neg. | 0 | 6.3AC | 0 | 0 | Sl. Pos. | | |
| 6AT6 Det. AF. . . . . | .5 | 0 | 0 | 6.3AC | Sl. Neg. | Sl. Neg. | 57 | | |
| 6X5GT Rectifier . . . . . | 0 | 0 | 175AC | * | 175AC | * | 6-3AC | 200 | |

117V AC line, switch in AM position except 6BA6 FM RF and 12AT7. DC reading with 20,000 ohm/volt meter, AC reading 1000 ohm/volt.
* Power line tie point.
Tie Point.

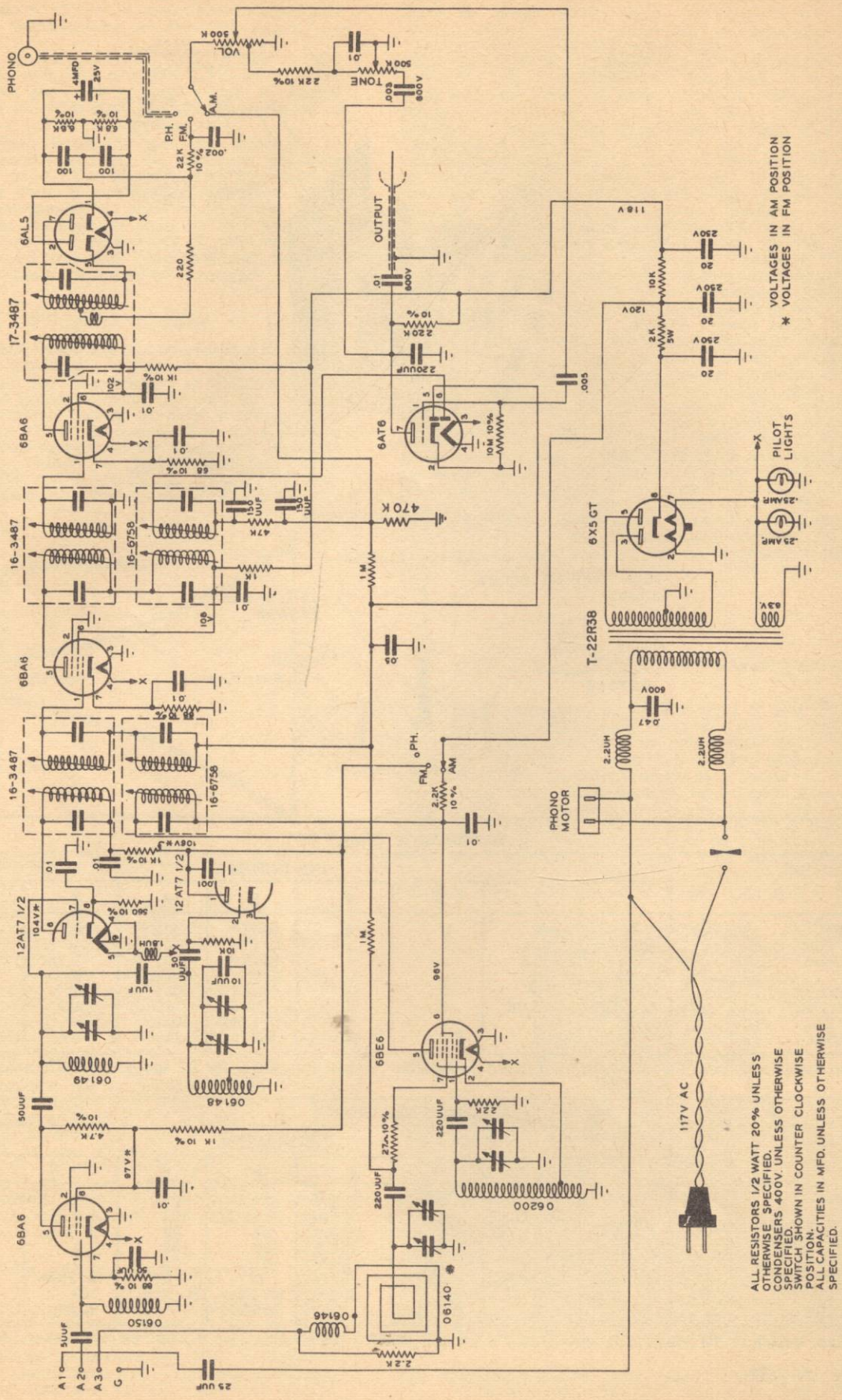
PHONO
VOL.
500 K
TONE
500 K
22 K 10%
.01
.005 600V
A.M.
P.H.
FM.
.002
22 K 10%
4MFD 25V
68 K 10%
100
6AL5
220
17-3487
6BA6
1K 10%
.01
68 10%
16-3487
16-6758
130 UUF
135 UUF
47K
1K
.01
10K
6BA6
.01
68 10%
16-3487
16-6758
10K 10%
12AT7 1/2
104V*
560 10%
18UH
10K
10UF
1UUF
12AT7 1/2
.01
061 49
061 48
50UUF
47K 10%
1K 10%
87V*
.01
6BA6
68 10%
32 UF
061 50
5UUF
A1
A2
A3
G
25 UUF
061 46
08140
2.2K
OUTPUT
.01 600V
220K 10%
220UUF
470K
1M
.05
6AT6
10M 10%
.005
2.2K 10%
AM
.01
1M
98V
6BE6
220UUF
22K
27K 10%
220UUF
06200
118V
250V
20
10K
250V
20
120V
2K 5W
250V
20
VOLTAGES IN AM POSITION
* VOLTAGES IN FM POSITION
PILOT LIGHTS
.25AMP.
.25AMP.
6X5 GT
63V.
T-22R38
600V
.047
2.2UH
2.2UH
PHONO MOTOR
117V AC
ALL RESISTORS 1/2 WATT 20% UNLESS OTHERWISE SPECIFIED.
CONDENSERS 400V. UNLESS OTHERWISE SPECIFIED.
SWITCH SHOWN IN COUNTER CLOCKWISE POSITION.
ALL CAPACITIES IN MFD. UNLESS OTHERWISE SPECIFIED.

COMPLETE INSTRUCTIONS
FOR CONSTRUCTION AND OPERATION OF THE

Meissner

# MODEL T4EK T.R.F. TUNER

## Parts List for T4EK

*This Unit available Assembled or as a Kit from your Local Distributor*

One chassis with bearing, 06279
One bracket and pulley assembly, 06282
One 4 gang variable condenser, 21-5223
One gang condenser shield assembly, 25-8208
One dial plate assembly, 05939
One input ant. coil, 9820
One output ant. coil, 9822
One input R.F. coil, 9824
One output R.F. coil, 9826
One untuned R.F. coil, 9828
One 500K volume control with switch, 29424
One two-position switch, 29582
One 100 ohm hum balance control, 29260
One power transformer, T22R38
One output cable assembly, 05554
One length of shielded wire, 22850
One length of braided shielding, 12491
One line cord, 12434
One 20-20-20 mfd. 250 V. electrolytic condenser, 34102
One .1 mfd. 400 V. paper condenser, 28113GT
One .05 mfd. 600 V. paper condenser, 28115GT
Two .05 mfd. 400 V. paper condensers, 28103GT
One .047 mfd. 600 V. molded condenser, 34160
One 8 mmf. molded mica condenser, 15149
One 25 mmf. ceramic condenser, 27165
One .01 mfd. ceramic condenser, 34111
Two .01 mfd.-470 ohm type JCR-P capristors, 34150-5
One .005 mfd.-10 megohm type JCR-C capristor, 34151-7
One 150 mmf.-150 mmf.-47,000 ohm filpec, 34171-1
Two 2,000 ohm 5 watt wire wound resistor, 34149
Two 47,000 ohm 1/2 watt carbon resistors, RC20AE473M
One 100,000 ohm 1/2 watt carbon resistor, RC20AE104M
One 100,000 ohm 1 watt carbon resistor, RC30AE104M
Two 470,000 ohm 1/2 watt carbon resistors, RC20AE474M
One 2 Megohm 1/2 watt carbon resistor, RC20AE205M
One 10,000 ohm 1/2 watt carbon resistor, RC20AE103M
One 15,000 ohm 1 watt carbon resistor, RC30AE153M
One tuning shaft, 06285
One AC receptacle, 19794
Four miniature tube sockets, 29477
One tube shield clip, 29530
One tube shield, 29531
One phono jack, 29253
One insulating washer for phono jack, 26624
One 2 lug terminal strip, 16731
One bakelite mounting plate for electrolytic condenser, 19450
One 1-insulated tie lug, 25-5732
One 3-insulated tie lug, 25-6715
Two 2-insulated tie lugs, 25-5731
Six single ended lugs, 11425 & 11422
One double ended lug, 16480
One cable clamp, 16491
One line cord strain relief (2 pieces), 29414
One dial pointer, 29125
Two dial scale retaining springs, 05938
One dial drum assembly, 05817
One dial cord assembly, 06286
One dial scale, 23-8238
Three Felt washers, 19595
Two knobs (plain), 29270
One knob with dot, 05878
One dial light socket, 29583
One dial lamp, 29262
One 6X4 tube.
One 6AT6 tube.
Two 6BA6 tubes.
One hairpin cotter, 29493
One piece of plastic tubing, 23440
Supply of screws, nuts, lockwashers, and washers for assembly.
Instructions, including circuit and pictorial diagrams.
One mounting dimensions sheet printed full scale.

As the kit is unpacked, all parts should be carefully checked against the parts list.
Any discrepancies should be reported at once to the supplier from whom the kit was purchased.

All parts should be mounted on the chassis according to the views shown in the pictorial diagram.

Mount the lug which is used to support the shielded wires to the AC switch, using a #5-40 screw and nut. Mount the gang condenser shield with two #6-32 screws passing through suitable holes in the condenser end plates into the threaded shield brackets. Mount the gang condenser with #6-32 nuts and lockwashers. Note that a 2-insulated tie lug mounts under one of the condenser studs. Tie lugs require a lockwasher between the mounting foot and the chassis. Ground lugs do not require lockwashers. Solder each rotor contact strap to the chassis, bending the end of the strap as required.

Mount the coils as shown, using #6-32 nuts and lockwashers. Be certain to mount the coils with the arrows on the spring clips pointing in the direction shown. Mount coil #9828 with the green dot as shown. Mount tie lugs and ground lugs where indicated.

Mount the power transformer with #6-32 nuts and lockwashers. Do not remove the nuts already on the power transformer.

Mount the tube sockets with #2-56 screws and nuts with the socket oriented to give the lug arrangement shown. Mount a tube shield clip at the 6AT6 socket.

Mount the phono input jack, AC outlet, 3-insulated tie lug and ant.-ground terminal with #5-40 screws and nuts, using lockwashers where shown. Be sure to insulate the phono jack from the chassis with the bakelite plate.

Mount the pulley bracket with #5-40 screw, nut and lockwasher.

Mount the volume control/on-off switch, phono switch, and hum balance control with appropriate nuts.

Push the tuning shaft through the bakelite bushing and secure with a hairpin clip. Slip the plastic tubing over the shaft.

Mount the dial drum with the flat side of the drum nearest the gang condenser. Mount the drum in a position directly over the pulleys.

Push the line cord through the chassis hole, place the two parts of the retainer around the line cord outside the chassis with the beveled edges nearest the chassis, and force into the chassis with pliers.

Push the wire end of the rubber-covered shielded output cable through the chassis hole, drape around coil #9828 as shown, and secure with the small cable clamp which mounts with a #6 self-tapping screw.

Mount the insulating mounting plate for the electrolytic condenser on top of the chassis with #5-10 screws, nuts, and lockwashers. Mount the electrolytic filter condenser in place, twisting the mounting lugs with pliers on the under side to hold securely.

Clip the pilot light socket to the bracket on the dial panel and mount the panel with two #6 self-tapping screws.

Place the dial scale in position on the panel and snap the spring clips in place.

# WIRING

Push-back hookup wire and solder are not furnished with this kit. If the colors of lead wire as shown in the pictorial are followed, the following approximate amounts of wire will be required:

| | |
|---|---|
| Brown | 5 feet |
| Black | 3½ feet |
| Red | 2½ feet |
| Green | 3 feet |
| Blue | 1 foot |
| Orange | 5 inches |
| White | 4½ feet |

If these colors are not available and a single color must be used, a total of 20 feet of wire will be required.

Cotton covered solid #22 push-back wire is recommended except for the white wire, which should be #20.

A good grade of rosin core wire solder is recommended. Avoid excessive use of solder, applying sufficient heat to the joint to permit the solder to flow smoothly at the joint.

Wire the kit as shown in the pictorial diagram, placing components and wiring exactly as shown. Note the use of twisted wires in the filament circuit, audio leads, AC line circuits, and power transformer. It is recommended that the filament and power supply wiring be done first.

Note that the shielded wire from the phono input jack is pulled straight across the chassis and the shield soldered to the ground end of the volume control; the shield extends nearly to the phono switch but does not connect to it.

Also note that the wires to the AC switch are shielded for a part of their length with a piece of braided shielding slipped over the twisted wire and soldered to the two ground lugs, as shown.

Be sure to connect the striped end (ground end) of paper by-pass condensers to ground.

Observe the color code used in the pictorial as an aid to accurate wiring

After completing all connections, the wiring should be very carefully checked to make sure that no errors were made or wires omitted.

String the dial as shown. With the condenser plates fully meshed, slip the pointer so that it coincides with the left hand dial scale line, and then securely clamp the pointer on the cord.

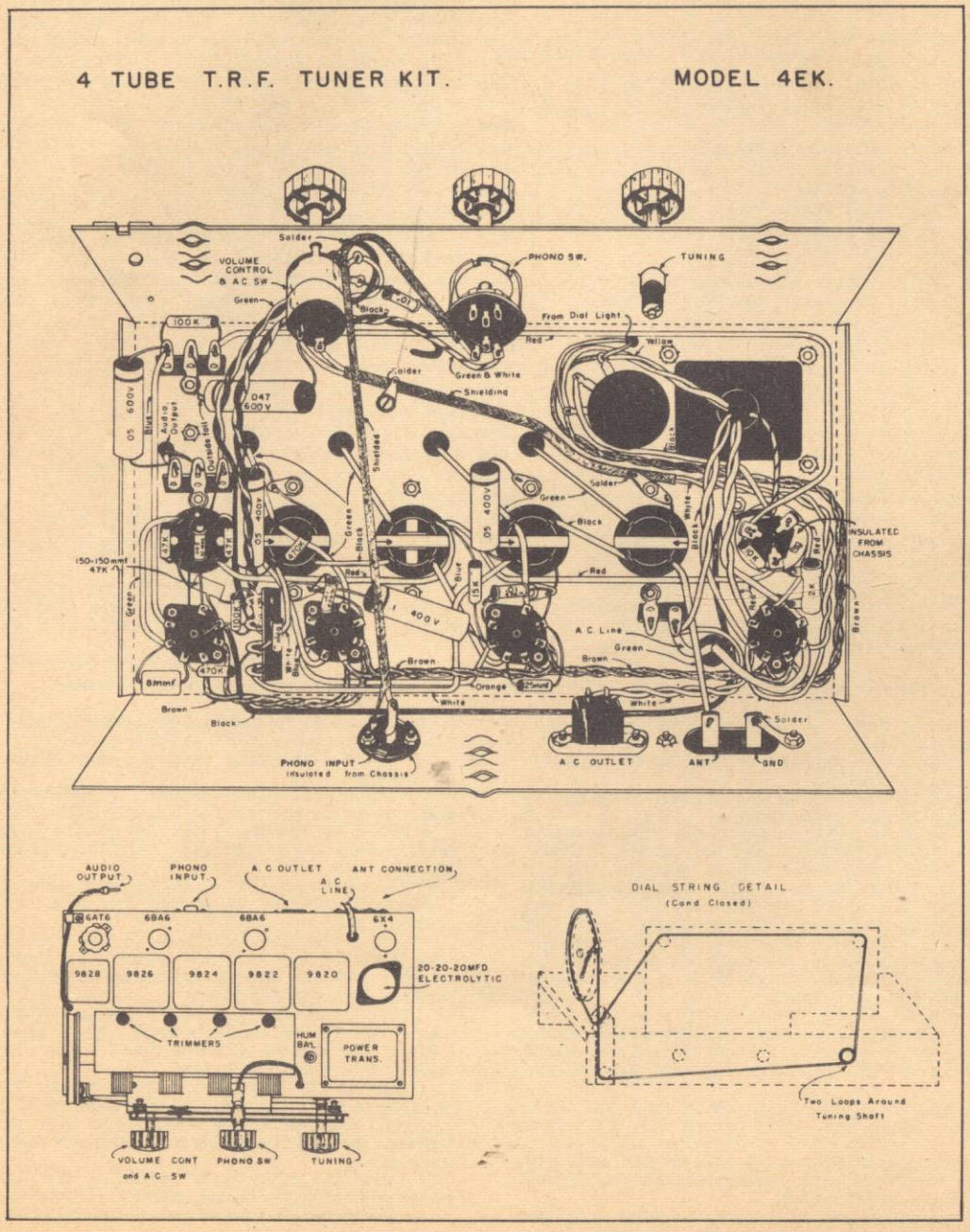

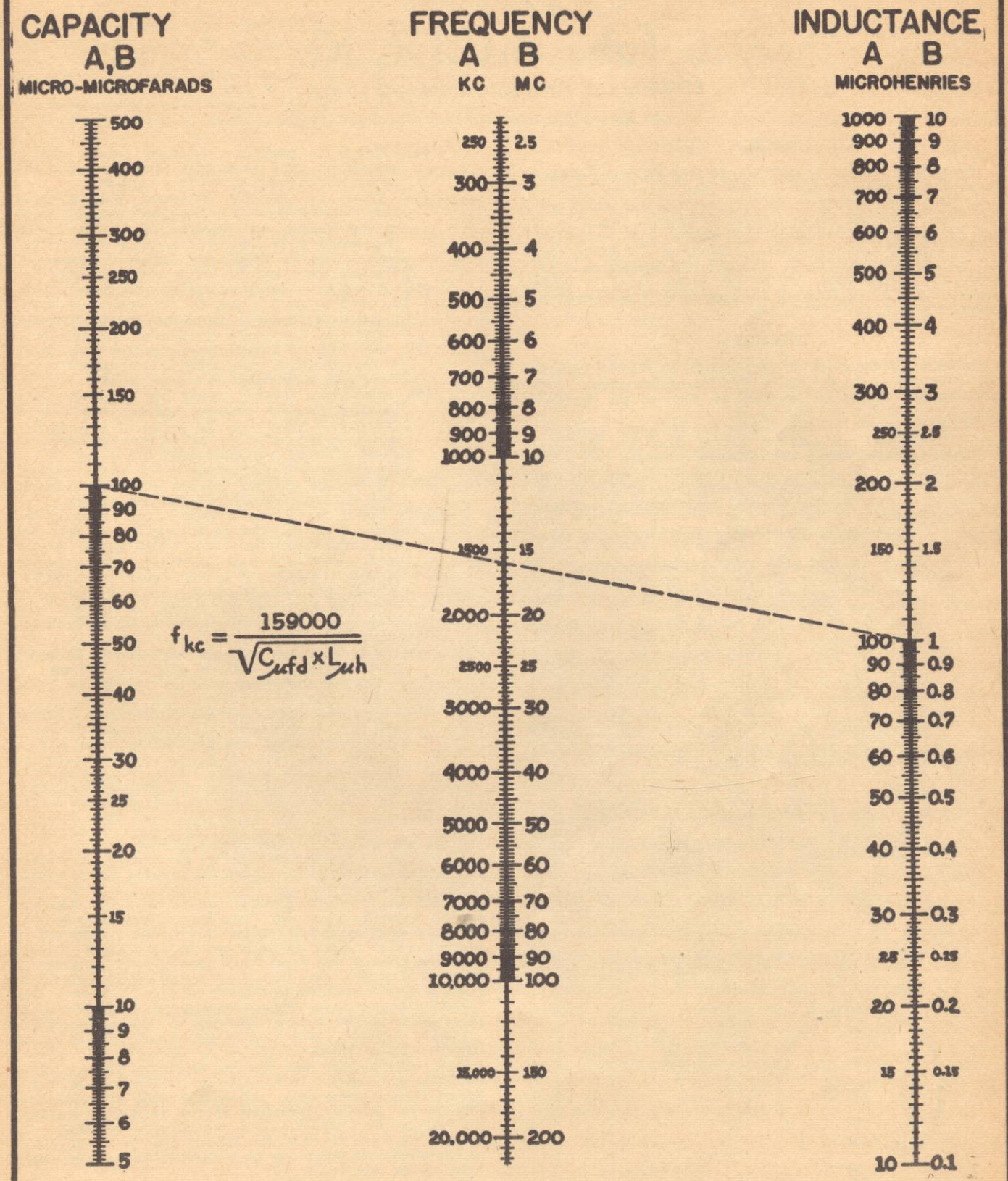


When any two of the quantities F, L, or C are known the third can be found by drawing a straight line. Example: 100 mmfd. and 100 microhenries tune to 1590 kc. (reading all A scales) or 100 mmfd. and 1 microhenry resonates at 15.9 mc. (reading all B scales).

Meissner

# 6 Tube AC-DC Kit

## BROADCAST AND SHORT WAVE 10-1199

*This Kit available from your Local Distributor.*

### GENERAL

The Meissner 6-tube AC-DC, No. 10-1199 kit, was designed to answer the requirements of a two band, low cost receiver.

It has a high impedance primary antenna coil which permits the use of almost any length of antenna available. It also has one stage of untuned R. F. and an I. F. wave trap.

This receiver covers a frequency range of 530 KC to 1650 KC and from 5.7 MC to 18 MC, and will operate satisfactorily on voltages from 105 to 125, either D. C. or 50-60 cycles A. C. Extra filtering is required if it is desired to operate on A. C. below 50 cycles.

### ASSEMBLY

As the kit is unpacked, all parts should be checked against the parts list at the bottom of this instruction sheet. Any discrepancies should be reported at once to the supplier from whom the kit was purchased.

The parts should be mounted in the following sequence:

(1) Mount all sockets, making sure that the keyway in the central hole of each is turned in the direction corresponding to that shown in the pictorial diagram, which shows the bottom view of the chassis.

(2) Mount the dial bracket on the front of the gang condenser.

(3) Assemble the tuning drive in the following manner:

a. Mount the dial drum on the condenser shaft.

b. Double the dial string and thread the doubled portion through the hole in the rim of the pulley from the inside out.

c. Hook the free end of the spring into one of the holes in the flat part of the pulley.

d. Close the gang condenser and rotate the pulley until the hole in the rim occupies the same position as the figure of the hour 7 on a clock face—then tighten the set screw.

e. Mount the tuning shaft, looping the string around it 2½ turns, in such a direction that the string leaves the tuning shaft without crossing. Detail of shaft mounting—Figure (1).

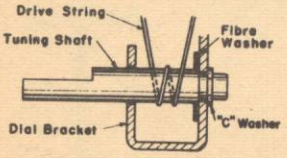


Fig. 1

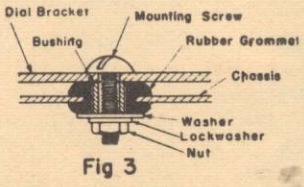


Fig 3

f. Stretch the string over the rim of the pulley. Figure (2) shows the position of the string in the completely strung up drive.

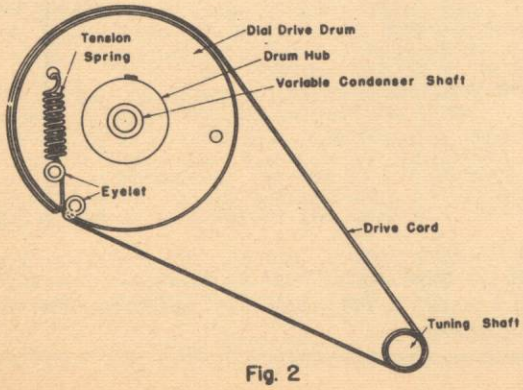


Fig. 2

(4) Mount the condenser mounting bracket on the rear of the gang condensers, using the 6-32x3-16" screw that is supplied for this purpose.

(5) Mount the variable condenser, putting three soft rubber grommets in the three mounting holes in the chassis (one on top and two in front), then assemble the mounting accessories in accordance with the detail drawing in Figure (3). Tighten the mounting screw and nut snug.

(6) Mount the volume control and the band switch, seeing that the locating lug on these controls engages in the holes in the chassis provided for the purpose of preventing rotation of the controls.

(7) Mount the IF transformers, rotating them so as to have the leads go directly to their proper terminals with a minimum of crossed leads.

(8) Mount the speaker, using two or more black bakelite washers between speaker and chassis (six are supplied), so the center of the speaker will be on the center line of the variable condenser shaft. Thread the leads from the output transformer through the hole at the left of the speaker.

(9) Mount the antenna coil on top of the chassis with the lugs protruding below the chassis.

(10) The IF wave trap is mounted by removing the lock nut which locks the adjustable iron core and the small mounting screw, which is also in the base. After the coil is held in place on the chassis, the lock nut is then screwed on the adjustable iron core screw and the mounting screw tightened in its proper place. After the wave trap is adjusted, the lock nut should be tightened against the chassis.

(11) The remaining coils and parts should be mounted in accordance with the pictorial diagram.

(12) The dial scale mounts on the dial bracket, using wood dowels as spacers between the two.

(13) The dial light assembly clips into the upper left hand corner of the dial. The leads should be threaded through the hole at the rear of the chassis. The leads from the filter choke also thread through this hole. A top view of the layout of parts is shown on the schematic diagram.

### WIRING AND ALIGNMENT

Having completed the assembly as above outlined, the set is ready for wiring. The set stands inverted very conveniently for this operation.

It will be found most convenient to wire the filament circuit (pins No. 2 and No. 7 on most tubes) complete before any other wiring or parts are installed. Then follow up with additional wiring, resistors and condensers. It will be found a great help in wiring if each wire in the pictorial diagram is marked over with a colored pencil as the corresponding wire is installed in the set.

Lead, resistor, and condenser placements should follow those shown in the pictorial diagram as closely as possible.

Ground variable condensor frame to chassis using the flexible wire provided.

It is recommended that the wiring be rechecked before the tubes are inserted in the receiver or the line cord connected to the power line. After this check is made, the voltages on the tube terminals should be checked against the voltage chart provided, if a volt-meter is available.

Lugs No. 4 and No. 6 on the 35Z5GT tube socket are used as convenient tie points, as no connection is made through these to the tube itself.

Assemble the pointer on the gang condenser shaft by pressing the projections on the back of the pointer into the hole in the end of the shaft. Close the gang condenser and set the pointer horizontal.

If a service oscillator or signal generator is available for alignment, its use will facilitate adjustment of the receiver and insure maximum sensitivity.

The signal generator should be connected to the signal grid or pin No. 8 of the 6SA7 mixer tube. This connection should be made through a .0005 to .25 mfd. condenser, the condenser being between the high side of the signal generator and the connection to the mixer grid. The signal generator should be set to 456 KC, which is the IF frequency, and the volume control of the receiver should be set at maximum or extreme clockwise. The output of the signal generator should then be turned up until a signal is heard and then the trimmers on the IF transformers adjusted (with insulated shaft screwdriver) for maximum output, reducing the output of the generator as the receiver becomes progressively more sensitive, always using as weak a signal as possible.

After the IF transformers have been properly adjusted, remove the connection from the generator to the mixer grid, reconnecting the generator to the antenna binding post. Leaving the frequency of the signal generator at 456 KC, adjust the wave trap by turning the adjusting screw which protrudes through the chassis. This adjustment should be made for the minimum of signal output. The generator output should be increased as the adjustment proceeds to insure maximum IF rejection.

When the IF transformers are adjusted for a maximum sensitivity, the antenna and oscillator trimmers should be adjusted in the following manner:

(1) Check the dial pointer position to see that it is horizontal when the gang condenser is closed.

(2) Set the band switch in the broadcast position or counter clockwise.

(3) Rotate the gang condenser until the pointer indicates 1400 KC.

(4) Adjust the signal generator to 1400 KC and connect the output of the signal generator to the antenna lead, using a .0002 mfd. condenser between the antenna and the high side of the oscillator. Increase the generator output to a medium level and adjust the oscillator trimmer, which is located through a hole on the top of the chassis just to the right of the speaker. The next step is to adjust the antenna coil by adjusting the trimmer which is closest to the chassis. Both of these trimmer adjustments should be made for maximum output, decreasing the generator signal strength as the set progressively becomes aligned. Leaving connections as they are, turn the dial pointer to approximately 600 KC and reset the signal generator for 600 KC, increasing the generator output until a signal can be heard. Adjust the padder screw, which is located near the center of the chassis, to maximum output. The best adjustment is obtained by simultaneously adjusting the padder screw and rocking the tuning control around 600 KC. Variation in wiring in circuit capacities may give the maximum output for 600 KC very slightly in error of 600 KC on the receiver dial.

(5) In the aligning of the short wave band, the band switch must be turned clockwise. Replacing the .0002 mfd. condenser with a 400 ohm resistor between the antenna post of the receiver and the output of the generator, set the generator to 16 megacycles and also the receiver dial pointer to 16 megacycles. Then adjust the oscillator trimmer, which is located through a hole on top of the chassis just to the right of the broadcast trimmer, for maximum output. When adjusting the oscillator trimmer on the short wave band, the trimmer should be tightened and then loosened to the second peak. The second peak will be the correct peak for this adjustment. Next adjust the short wave antenna coil, which is a trimmer located near the top of the coil. As before, the adjustments of these trimmers should be made with as low a signal level from the generator as possible, as the alignment proceeds. The padding of the short wave band is fixed.

### CAUTION

**The power line is connected directly to this chassis. The receiver must be suitably protected by a non-metallic cabinet and non-metallic knobs so that no one can make contact with any metal part of this radio when in operation. A cabinet back must be used to prevent accidental contact with the chassis. This back should have small holes or slots to permit ventilation yet prevent contact. Mounting screws used to hold the set in a cabinet should also be covered to prevent contact.**

## VOLTAGE ON SOCKET PIN NUMBERS

| TUBE | 1 | 2 | 3 | 4 | 5 | 6 | 7 | 8 |
|---|---|---|---|---|---|---|---|---|
| 12SK7GT RF | 0 | 24VAC | 0 | grid | 1.2DC | 95VDC | 37VAC | 75VDC |
| 35Z5GT | NC | 110VAC | 110VAC | NC | 110VAC | NC | 76VAC | 112VDC |
| 12SA7GT | 0 | 12VAC | 95VDC | 95VDC | grid | 0 | 24VAC | grid |
| 12SK7GT IF | 0 | 37VAC | 0 | grid | 1.2DC | 95VDC | 50VAC | 95VDC |
| 12SQ7GT | 0 | grid | 0 | diode plate | doide plate | 10VDC | 12VAC | 0 |
| 35L6GT | 0 | 76VAC | 95VDC | 95VDC | grid | NC | 50VAC | 6VDC |

Measurements taken with 1,000 ohms per volt meter. 115 volts AC line.
NC indicates "No Connection": all voltages indicated are positive with respect to chassis unless otherwise marked.

## COMPLETE PARTS LIST

1 Chassis No. 02859
1 Input IF Transformer No. 16-6658
1 Output IF Transformer No. 16-6660
1 Broadcast and short wave antenna coil No. 14-2860
1 Broadcast and shortwave oscillator coil No. 14-2862
1 Series peaking coil No. 02864
1 IF Wave trap No. 15-2866
1 PM speaker with output transformer No. 25274
1 Variable condenser No. 26128
1 Filter choke No. T-20C65
6 Octal sockets, 25-8209
3 Tie lugs
1 Padder 22-7007
1 500K ohm volume control with switch, 19701
1 Band switch, 25273
1 Dial mechanism plate, 02865
1 Trimmer base assembly, 17738
1 Dial drum, 19706
4 Wood dowels, 15393
1 Dial cord and spring assembly, 02869
1 Dial Shaft, 19703
1 "C" washer for dial shaft, 16653
1 Bakelite washer for dial shaft, 16637
1 Dial scale, 25276
1 Pilot socket and 6-8 volt pilot light, 19710 & 19711
1 Dial pointer, 19705
3 Knobs, 19709 & 25277
1 Line cord; 12434
1 Binding post assembly, 19740
2 Black rubber grommets for 3/8" hole, 14211
1 Black rubber grommet for 3/16" hole, 19216
3 Gum rubber grommets 5/32 I.D. for 1/4" hole, 19727
1 Condenser mounting bracket, 19132
4 Chassis mounting brackets, 19133
2 Solder lugs, 11422
1 180 ohm resistor 5% 1/2 W. carbon, RC20AE181J
2 470,000 ohm resistor 20% 1/2 W. carbon, RC20AE474M
1 15 megohm resistor 20% 1/2 W. carbon, RC20AE156M
1 3.3 megohm resistor 20% 1/2 W. carbon, RC20AE335M
1 22,000 ohm resistor 10% 1/2 W. carbon, RC20AE223K
1 2.2 megohm resistor 20% 1/2 W. carbon, RC20AE225M
1 220 ohm resistor 10% 1/2 W. carbon, RC20AE221K
1 100 ohm resistor 10% 1/2 W. carbon, RC20AE101K
1 2,200 ohm resistor 20% 1/2 W. carbon, RC20AE222M
1 39,000 ohm resistor 10% 1/2 W. carbon, RC20AE393K
2 .02 mfd. 400 volt paper condenser, 28117
1 .002 mfd. 600 volt paper condenser, 28150
3 .05 mfd. 400 volt paper condenser, 28103
1 .01 mfd. 400 volt paper condenser, 28119
1 20-20 mfd. 150 volt electrolytic condenser, 18163
3 .00022 mfd. 20% mica condenser, CM20A221M
1 .0036 mfd., 2% silver mica condenser, CM35C362G
1 .00047 mfd. mica condenser, CM20A471M
2 12SK7GT tubes
1 each of the following tubes: 12SA7GT, 12SQ7GT, 35L6GT, 36Z5GT.
Miscellaneous assortment of screws, nuts, washers, hookup wire and solder.

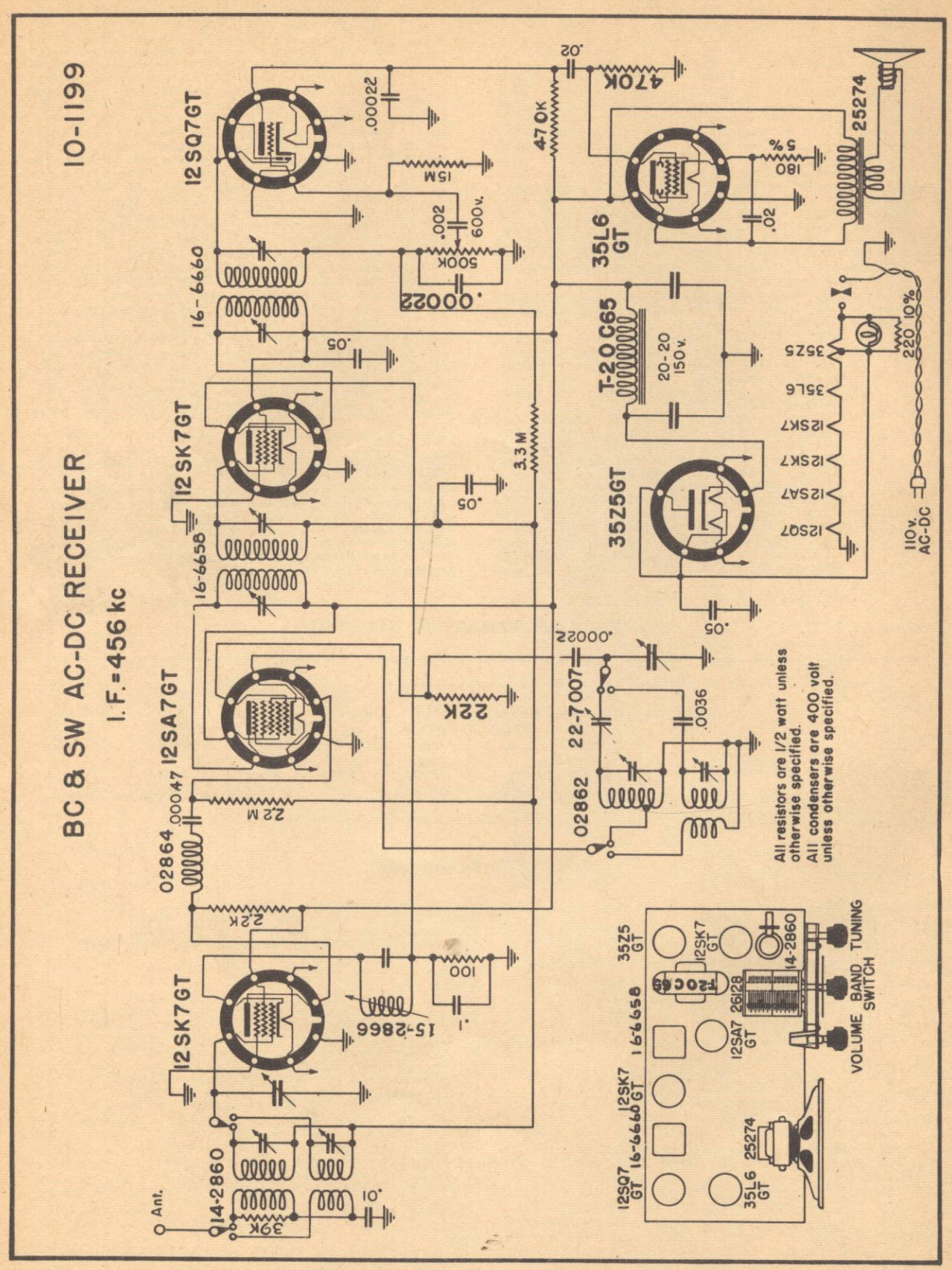
BC & SW AC-DC RECEIVER
I. F. = 456 kc
10-1199
12SQ7GT
12SK7GT
12SA7GT
12SK7GT
35L6 GT
35Z5GT
T-20C65
20-20 150v.
25274
16-6660
16-6658
02864
14-2860
15-2866
02862
22-7007
Ant.
All resistors are 1/2 watt unless otherwise specified.
All condensers are 400 volt unless otherwise specified.
VOLUME
BAND SWITCH
TUNING
110v. AC-DC

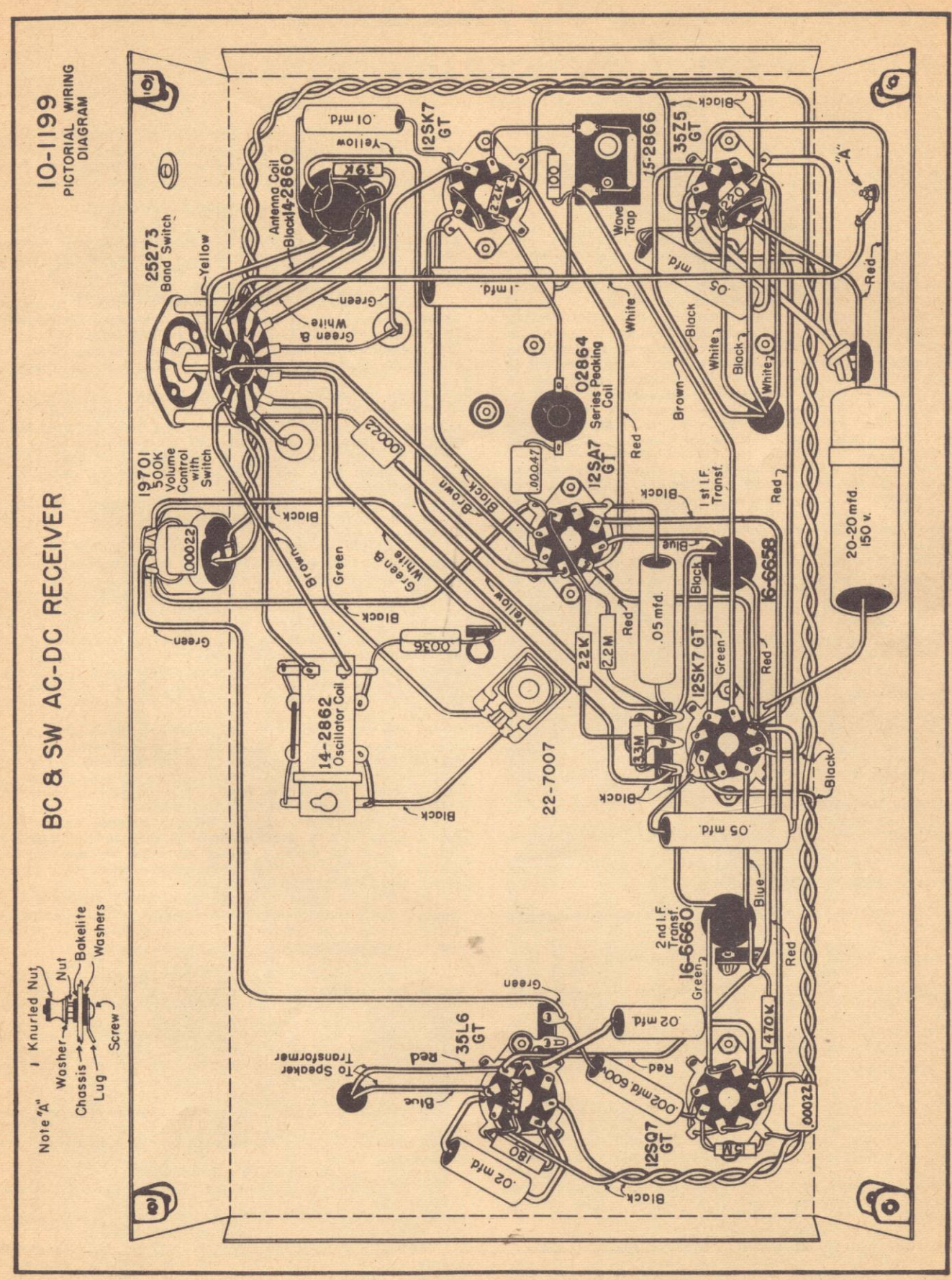
10-1199
PICTORIAL WIRING DIAGRAM
BC & SW AC-DC RECEIVER
25273 Band Switch
Antenna Coil 14-2860
39K
12SK7 GT
.01 mfd.
22K
100
15-2866 Wave Trap
35Z5 GT
220
"A"
.1 mfd.
.05 mfd.
02864 Series Peaking Coil
12SA7 GT
.00047
.00022
19701 500K Volume Control with Switch
1st I.F. Transf.
16-6658
20-20 mfd. 150 v.
2.2M
.05 mfd.
12SK7 GT
14-2862 Oscillator Coil
.0036
22-7007
3.3M
2nd I.F. Transf. 16-6660
470K
.02 mfd.
35L6 GT
To Speaker Transformer
.002 mfd. 600v.
12SQ7 GT
1M
180
Note "A"
1 Knurled Nut
Nut
Bakelite Washers
Washer
Chassis
Lug
Screw

Meissner

# WIRELESS PHONOGRAPH OSCILLATOR

*Only the oscillator coil 17-9373 is available.*

The Meissner Wireless Phonograph Oscillator No. 10-6380 is a device to permit any radio receiver to be utilized as an electric phonograph without any wires connecting the Wireless Phonograph Oscillator to the radio receiver and without in any way altering the receiver.

## WIRELESS OPERATION

The Wireless Phonograph Oscillator is actually a radio transmitter of very low power. (Federal laws prevent raising the power output.) It will radiate a signal in the broadcast band that can be picked up by any broadcast receiver of sufficient sensitivity within a radius of 20 to 50 feet from the phonograph oscillator, when the set is tuned to pickup the signal. Sometimes however, because of peculiar wiring conditions, antenna arrangements, or placement of ungrounded metallic bodies, the signal will radiate particularly well in one direction and may be picked up on a neighbor's set if located sufficiently close. It is also possible that reception of the signal from the Phonograph Oscillator may be hampered by inadequate sensitivity in the receiver or by shielding caused by pipes, girders, metal lath, etc. and that the useful range of the wireless oscillator may be less than the specified 20 to 50 feet.

In such cases it will be necessary to select a new location for either the set or the oscillator, run the antenna lead of the set closer to the phonograph oscillator, or to use the "Wired Connection" (which does not alter the radio set in any way) but requires two wires to run from the phonograph oscillator to the receiver.

When using the "Wireless" arrangement it must be remembered that the antenna of the receiver is still connected and that it is capable of picking up outside signals and interference. When heavy local noise, as from a vacuum cleaner motor, is experienced, or a local thunderstorm gives rise to objectionably loud static interference, it will be found that the "Wired Connection" will give much more satisfactory results.

## WIRED CONNECTION

In the "Wired Connection", the antenna is connected to the binding post marked "A" on the phonograph oscillator and the receiver connected to the phonograph oscillator by means of two wires; one connects together the "G" (or "Gnd") binding posts on both the receiver and the oscillator while the other wire connects the "A" (or "Ant") binding post of the receiver to the green wire projecting from the top of the phonograph oscillator.

If the phonograph oscillator is to be used *only* in the "wired" connection it is recommended that the "coupling condenser" marked in the schematic and Pictorial diagram be omitted. This will reduce the likelihood of interference with your neighbor's reception.

## DOUBLET CONNECTIONS

If the receiver employs a doublet antenna for short-wave reception and it is desired to use it in the "Wired Connection" the one side of the doublet connection to the binding post marked "D" on the set (or any other designation other than antenna and ground) should be left so connected, and the other antenna binding post and the ground binding post connected to the phonograph oscillator as instructed in the section "Wired Connection". For the "Wireless" arrangement, no change is necessary. Where a transmission line and coupler are used the "Wireless" arrangement may not work satisfactorily and recourse must be made to the "Wired Connection."

## PHONOGRAPH PICKUP

The phonograph pickup should be of the high-impedance type, either crystal or magnetic. If a low-impedance pickup is used a step-up transformer must be used between the pickup and the phonograph oscillator. A voltage dividing resistor network has been provided in the phonograph oscillator to accommodate, to some extent, the differences in pickups. The connections for this network are discussed in the section "Distortion".

## POWER SUPPLY

The Meissner Phonograph Oscillator No. 10-6380 is designed to operate from a 110-volt source, either AC or DC. On the latter type current it may be necessary to reverse the line plug (as in the case of all AC-DC radio devices operating on DC) before the device will function. The standard unit is not recommended for 25-cycle operation, but by adding two 4-mfd. 200-volt electrolytic condensers as indicated by dotted lines in the circuit diagram, operation will be satisfactory on 25-cycle current.

## ASSEMBLY

The parts should be mounted on the chassis in accordance with the bottom view of the chassis shown in the Pictorial Wiring Diagram. The order of assembly is of little consequence.

## WIRING

Having completed the assembly operations described above, study the sheet of suggestions, "General Construction Hints," packed with the kit. When finished, start the wiring in accordance with the practices suggested in that sheet, following the position of wires shown in the Pictorial Diagram.

## TEST

When the wiring has been completed and has been checked for accuracy against the Pictorial Diagram, the tubes may be inserted, the pickup connected and the unit made ready for test. On the first test it is best to place the oscillator near the receiver or at least near the antenna leadin (which must not be shielded if wireless operation is to be obtained.)

**The Chassis of the Wireless Phonograph Oscillator must not be grounded since the signal radiates from the chassis.**

The switch on the end of the chassis should be turned clock-wise to heat up the unit. (When the unit is operating the line cord will become quite warm. This is normal to the operation of this and certain other types of AC-DC apparatus.)

When the tubes have warmed up, usually about one minute, start a record playing and, if there is a volume control on the pickup, turn the volume control to maximum. Turn the volume control on your radio set to approximately the position used for local broadcasting stations and tune the receiver (on the broadcast range) as if looking for a local station. The phonograph record will be heard some place on the dial.

In the top of the coil can on the oscillator there is a hole through which an adjusting screw is visible. A shaft with a tuning knob also projects from this end of the coil can. Both of these adjustments are tuning adjustments on the oscillator. The former is the rough adjustment while the knob and shaft actuate the fine adjustment.

If the phonograph signal is being interfered with by any strong signal it is a simple matter to shift the frequency of the oscillator by turning either or both adjustments, retuning the set to the new oscillator frequency until a frequency free from interference is found.

If the radio hums when the phonograph pickup arm is touched, the connections from the pickup to the Phonograph Oscillator should be reversed. (On some pickups this phenomena will not be present.)

## DISTORTION

The phonograph oscillator, being a miniature transmitter, can be over-modulated by too great an input voltage from the phonograph pickup. This overmodulation gives rise to objectionable raspy distortion on loud notes. If reproduction is of poor quality on loud notes, the flexible grid connection of the 6F7 tube should be connected to the junction indicated in the schematic and Pictorial Diagram, for pickups with high output voltage.

## MICROPHONE

Where a microphone is used in connection with the phonograph oscillator to permit announcements to be made, it is well to remember that the **signals may be picked up by a neighbor.**

## CONVENIENCE OUTLET

A power outlet has been provided on the Phonograph Oscillator so that the power cord of the radio or the phonograph motor may be plugged into it. Power is available at this outlet as long as the line cord is plugged in.

When finished with phonograph operation, turn the switch counter-clockwise which turns off the oscillator and automatically connects the antenna to the receiver for normal reception.

# PHONOGRAPH OSCILLATOR 10-6380

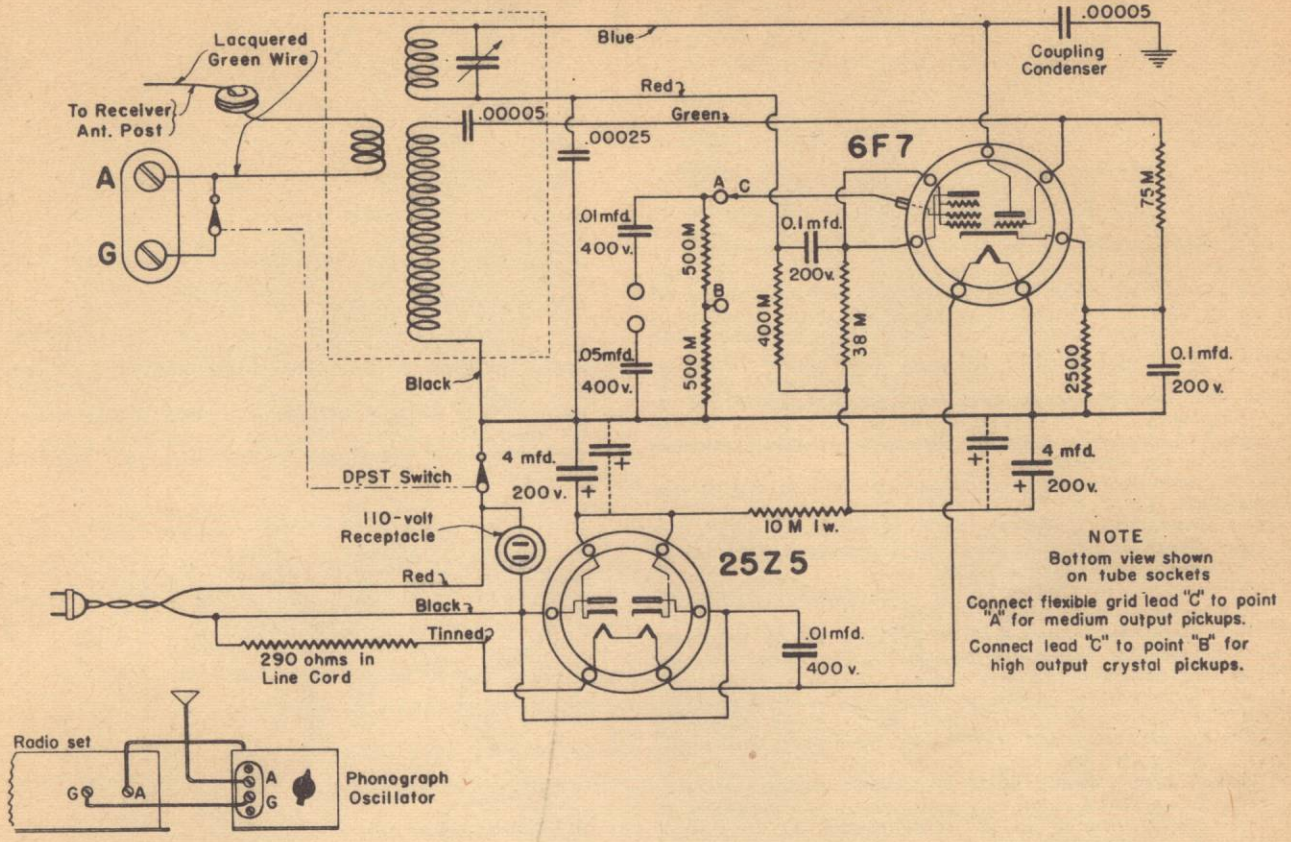


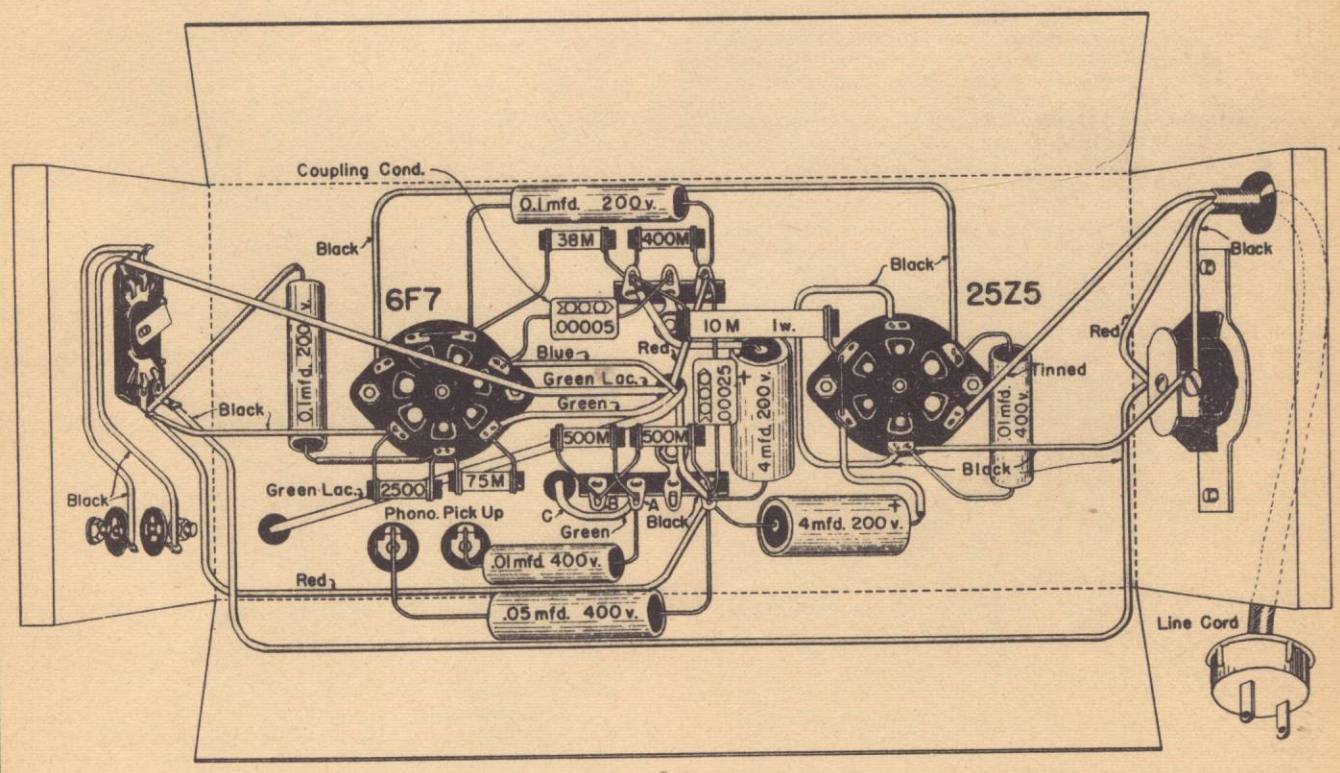

# OPERATING INSTRUCTIONS

FOR USE WITH THE

# ANALYST

*The manufacture and sale of the Meissner Analyst has been discontinued since the War. However the information below is given since it is applicable to all instruments of this type.*

The Meissner **Analyst** is a tool for the rapid solution of difficult Service problems. It is a device to permit the rapid location of faults in defective radio receivers or sound equipment without measurements, complete voltage measurements on all tube elements, or tedious tracing of circuit wiring. The fundamental principle of the **Analyst** is that it permits the Serviceman to listen to and measure the signal as it passes through each of the components in a receiver, regardless of the level of the signal, and in spite of the fact that the signal may be at an inaudible (IF or RF) frequency. It is thus possible to tell exactly where the signal is absent or becomes distorted, quickly localizing the fault in the receiver.

The Service instruments incorporated in the device are as follows:

1. (a) An audio amplifier with phone-jack output for headphones to be used for listening to any audio voltage in the radio set.
   (b) An audio voltmeter of 2-megohms impedance with a range of 0.1 to 1000 volts.
2. A DC voltmeter with a resistance of 10 megohms covering the range 0 to 500 volts, either positive or negative.
3. (a) A frequency meter to check oscillator frequency.
   (b) A vacuum-tube voltmeter covering the range .05 to 50 volts and indicating frequency from 600 KC to 15 MC.
4. (a) A TRF Tuner with phone-jack output connections for a head set to be used for listening to the quality of an RF or IF signal.
   (b) A vacuum-tube voltmeter covering the range 50 micro-volts to 50 volts and indicating frequency between 100 KC and 1700 KC.
5. A line-current ammeter.

All of these instruments, except the D.C. voltmeter, have the additional feature of "memory," indicating any change from the previous reading. This feature makes the solution of intermittent faults simple since the indicators can be set for the operating conditions in the receiver and when a fault occurs, the indicator concerned with the fault will immediately indicate the changed condition.

The **Analyst** is a great aid in locating the trouble in a receiver but it is the Serviceman who must utilize his knowledge of radio theory, **Analyst** performance, and his "trouble-shooting" ability to isolate the offending component, defective joint, short circuit or other cause of trouble, after the **Analyst** has helped him to localize the fault as occurring between two points electrically close together in the circuit. It is recommended that the following material be studied slowly and thoroughly so that the use of each part of the equipment may be completely mastered.

## SHIELDED CABLES AND PRODS

In order to make connections between the various sections of the **Analyst** and the corresponding points in the receiver without introducing regeneration, convenient shielded leads have been provided with appropriate plugs on one end and probes on the other.

In order that the shielded leads may be used to make connections to various parts of the circuit in a receiver without seriously disturbing circuit performance, special isolating or limiting resistors or condensers have been built into the prod handles. The special circuit elements incorporated together with the identifying color code on the prods are given in the following table:

| Section | Circuit in Prod Handle | Prod Handle Code |
|---|---|---|
| Audio | Direct Connection | Black—No Stripe |
| Voltmeter | 1-Megohm resistor | Black—One Blue Stripe |
| Oscillator | 1-MMF condenser | Brown—No Stripe |
| RF - IF | 1-MMF condenser | Black—Two Red Stripes |

The cables themselves have a colored tracer to correspond to the color-coding of the handles.

## THE AUDIO CHANNEL

The Audio Channel, located at the top right-hand side of the panel, consists of a single-stage audio amplifier, an attenuator, a diode voltmeter and an electron-ray voltage indicator, together with associated controls and terminals.

The Audio Amplifier, which is essentially flat in its frequency characteristic throughout the entire audible range, may be used to energize a high-impedance head-set for listening to audio voltages, may be used as a voltage amplifier to drive a cathode-ray oscillograph or may drive its associated diode voltmeter to indicate audio voltages with the aid of the associated indicator tube and attenuator.

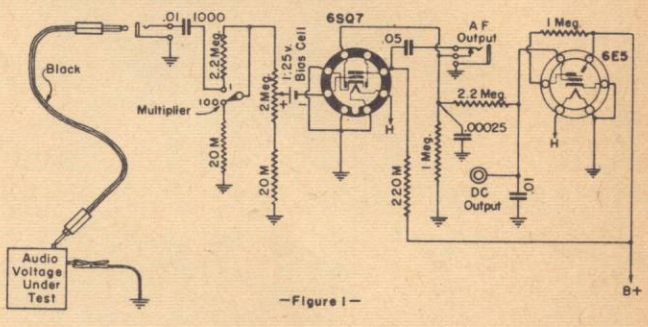


—Figure 1—

The circuit diagram of this channel is shown in Figure 1. A 6SQ7 tube is used as an amplifier and diode rectifier and a 6E5 electron-ray tube controlled by the rectified voltage from the 6SQ7 is used as an indicator. A two-position multiplier and a resistance attenuator permit operation of this channel over a range of 0.1 volt to 1000 volts AC.

Signals are introduced into the Audio Channel through a shielded cable which plugs into the jack marked **Input** in the upper right-hand corner of the panel. If the Audio Channel is used to check the frequency characteristics of an amplifier, it should be remembered that, while the amplifier itself is flat in the audible range, the input cable has a capacity of approximately 125 mmfd. which will reduce the high-frequency response of any circuit having an impedance approaching or exceeding ½ megohm. For all other purposes the capacity of the input cable can usually be neglected. If the voltage being measured is great enough to work the indicator when the Oscillator or RF-IF cable is used in place of the Audio cable, the above limitation on high-frequency response is no longer effective since the input capacity of the Oscillator and RF-IF cable is only 1 mmfd. which will not disturb a normal audio circuit of even unusually-high impedance. In this case, however, a false lack of low frequencies will be indicated.

If headphones are connected to the output of the amplifier to listen to an audio voltage applied to the input of the **Analyst** the phones should be of the high-impedance type (Crystal preferred). Low-impedance phones will fail to reproduce low frequencies, particularly hum frequencies. When the phones are plugged into the output jack, the diode is automatically disconnected from the amplifier to eliminate the distortion it would otherwise produce.

The rectified current from the diode is filtered and applied to the grid of the 6E5 indicator tube at the right of the panel. This voltage-measuring device, combined with the Attenuator and Multiplier switch, makes it possible to compare the voltage of two audio signals, thereby determining the gain or loss between two points. The rectified DC voltage at the 6E5 grid appears at the pin-jack at the right side of the panel for measurement with the Electron-

ic Voltmeter, if it is desired to extend the voltage range of the Audio channel.

The Audio section can be used in many ways for testing audio systems because of the following features: The high input-impedance, 2 megohms, together with an output-impedance which matches high-impedance headphones or an oscilloscope input, makes listening or visual tests possible at any point in the audio system without disturbing its operation.

Tone quality can be tested at a diode detector output, or at the plate of a bias or grid-leak detector, whereas the direct connection of phones or oscillograph terminals might cause considerable change in detector characteristics.

The low distortion and wide frequency range enable the operator to check tone quality with confidence that no frequency or harmonic distortion is occurring in the **Analyst.**

The wide frequency range, combined with the electron-ray indicator, enables tests to be made above and below the audible range. Voltage variations of low frequency will cause the edge of the indicator-tube shadow to waver, flicker or blur, depending on the frequency. 60— or 120 — cycle hum will cause a blurred shadow on the indicator, and can also be heard in the headphones. Frequencies above the audible range to approximately 50,000 cycles will close the shadow smoothly in the normal manner, when the proper Attenuator and Multiplier adjustment is made, but the signal will not be audible in the phones.

The extreme range of overall amplification or attenuation will change an audio voltage ranging from 0.1 to 1000 volts to normal ear-phone volume, and make headphone listening tests possible anywhere in the audio system from the detector to the output plates of high powered amplifiers. Hum voltages and A. C. voltages over the same range can also be measured. The accuracy of voltage measurements is not as good as with ordinary A. C. voltmeters, but this channel permits AC voltage measurements to be made in high-impedance circuits where such measurements would be impossible with ordinary AC meters. The accuracy is sufficient for gain and hum measurements, and for approximate measurement of power-transformer voltages. The stability of the circuit and sensitivity of the indicator are such that balance of high-voltage secondaries, phase-inverters and push-pull stages can be measured very accurately.

An additional convenience of the Audio section is that, when used with an oscilloscope, the signal level can be adjusted for a satisfactory picture size, regardless of the voltage being observed.

## ELECTRONIC VOLTMETER

The Electronic Voltmeter channel, in the upper left-hand corner, incorporates a voltmeter tube, 6C5, a voltage divider system, and a D.C. Voltmeter.

Four voltage ranges are provided: 0 to 5, 25, 125 and 500 volts, positive or negative with respect to the ground clip of the Analyst. A four-position switch, located at the left of the meter, selects the range required. The fact that positive and negative readings are available will facilitate taking voltage readings at any point in the receiver with a single probe, regardless of polarity. The ground connection, which is clipped to the chassis, provides the return circuit for the Voltmeter.

The input resistance of this instrument on all ranges is 10,000,000 ohms so that all DC operating and control voltages may be measured directly at the tube elements while the receiver is in operation, without such operation being affected by the measuring device.

The operation of the Electronic Voltmeter Channel is explained by reference to Figure 2. The blue-coded test lead, having a 1-megohm resistor in the handle, is plugged into the input jack on the Voltmeter panel. The resistor is included so that grid biases can be measured directly at the tube grids, without affecting any R. F. or audio voltages that may be present. Connect the ground clip (at end of rubber covered wire) to one side of the voltage to be measured, usually the negative, such as the receiver chassis. Touch the blue prod to the ground clip and adjust the "Zero Set" control for a zero reading on the meter. Then set the "Range" control to a suitable value to cover the voltage to be measured. Touch the blue prod to the other terminal of the voltage being measured (such as B-plus or AVC) and read the voltage on the meter.

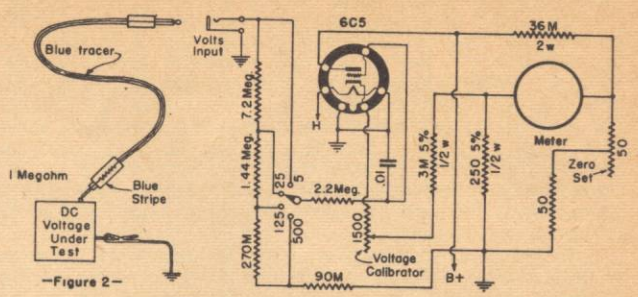

—Figure 2—

The accuracy of the instrument is practically independent of normal changes in line voltage and of changing characteristics of the voltmeter tube. The voltmeter tube is used in a degenerative circuit which acts as follows: When a given voltage is impressed on its grid, a change in voltage across the cathode resistor takes place which is nearly equal to the voltage applied to its grid. It is this difference between grid voltage and cathode voltage which is measured by the meter. This allows a linear calibration of the meter scales; that is, the meter needle deflection is exactly proportional to the voltage being measured.

The adjustment of the "Voltage Calibrator" and "Zero Set" are fully explained in the Appendix. Due to line-voltage variations it may be necessary occasionally to adjust the Zero Set control, which for convenience is located on the panel.

The large range of voltage scales and the high resistance of the Electronic Voltmeter make it a very useful instrument. Some of the voltages which cannot be measured with an ordinary voltmeter without changing circuit conditions are A.V.C. voltages, plate voltages in resistance-coupled amplifiers, grid voltages, and bias voltages that are obtained from the negative side of the "B" supply through a resistance-capacity filter. All of these can be measured with the Electronic Voltmeter with an accuracy comparable to that obtained with an ordinary voltmeter when measuring voltages from low-resistance sources. The Electronic Voltmeter obviously can also be used for measuring any other D.C. voltages in a receiver.

## OSCILLATOR CHANNEL

The Oscillator Channel, consists of a single stage of tuned R. F. amplification covering a frequency range of 600 Kc to 15,000 Kc, coupled to a diode voltmeter tube and an electronic indicator tube. High gain is achieved in the amplifier by the use of a 6AC7 (television) amplifier tube. The centrally-located tuning dial operates the single-gang tuning condenser which tunes the amplifier, while the Range switch at the left selects the frequency range desired. The circuit diagram, which is so simple that no explanation is necessary, is shown in Figure 3.

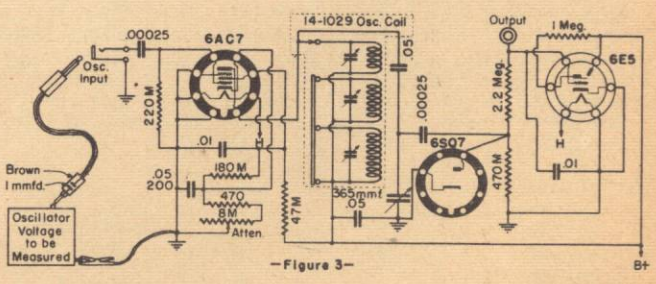

—Figure 3—

The oscillator channel can be used to measure and compare oscillator voltages and frequencies. It will show whether or not the oscillator of a receiver is operating, and the frequency at which it is working. It will show the presence and frequencies of parasitic oscillations if they are within the tuning range of the amplifier.

This ability of the Oscillator channel to measure the frequency of an oscillator is often of considerable utility in solving service problems since it is possible for an oscillator to change frequency, thereby stopping reproduction of the signal from a given station, yet the oscillator may continue to oscillate showing grid current as in the normal manner. In the case of intermittent receivers, sometimes this shift in oscillator frequency is the only clue to the de-

fective component.

In order to make connections from the oscillator circuit to the input of the oscillator channel a shielded cable is provided that has as its end a special prod having a built-in series capacity of only 1 mmfd. This series capacity is used to limit the de-tuning of oscillator or R. F. circuits when the prod is connected thereto. The small capacity reduces the amount of voltage that would otherwise reach the grid of the first tube in the Oscillator channel and is the reason why a high-gain amplifier must be used to obtain adequate sensitivity of indication.

When it is desired to check an oscillator frequency, usually enough voltage can be picked up from the oscillator if the prod is held close to the stator terminal of the oscillator tuning condenser without actually touching the terminal, meanwhile tuning the Oscillator channel dial until there is a slight flicker of the indicator shadow. It is to be noted that some oscillators have strong harmonics and indications of voltage may be obtained at several frequencies that are integral multiples of a given base frequency. The true oscillator frequency is the lowest frequency in the series and is equal to the difference in frequency between any two adjacent harmonics.

In checking an intermittent receiver for possible oscillator shift, the test prod is clipped to the stator of the tuning condenser and the receiver is adjusted to compensate for the added capacity by tuning the receiver slightly higher in frequency than its previous setting. The dial of the **Analyst** is then adjusted to resonance and the Attenuator set so that the indicator tube shadow just closes. If the oscillator shifts frequency, the shadow will spread out until the Oscillator channel dial is re-tuned, in which case, when the shadow angle is again zero, the dial of the Oscillator channel will indicate the new frequency.

If the oscillator voltage decreases, but its frequency does not change, the shadow angle will increase when the voltage changes but re-tuning alone will not return the shadow angle to zero. If the voltage increases but the frequency does not change, the bright areas on the indicator tube will overlap. When such a condition exists the Attenuator should be adjusted until there is a small shadow angle, and the Oscillator channel dial turned to see if maximum signal occurs at any other setting as indicated by the shadow closing. If the shadow does not close at any other position of the dial, there obviously has been no shift of oscillator frequency.

## R.F.-I.F. CHANNEL

The RF-IF channel is a high-gain three-stage tuned RF amplifier employing three 6SK7 tubes. This amplifier is followed by a diode voltmeter tube and an electronic indicator tube. The signal is fed to the input jack through the special input cable, and full control of the level is provided by a four-position capacitive "Multiplier" and a resistive "Attenuator". Three frequency ranges are provided, selected by the "Range" switch. The bands covered are 600 to 1700 kc, 240 to 615 kc and 95 to 250 kc. The rectified output is available at the output jacks through suitably designed circuits so that headphones may be used to determine the quality of the signal at the point under examination, or oscillographic examination may be made. The D. C. component of the output is solely dependent upon the carrier voltage and the Attenuator setting, and is not affected by the percentage modulation of the signal. The audio component will depend on the percentage modulation, in addition to the factors that determine the D. C. output. Both A. C. and D. C. components appear at the phone and pin jack marked "Output."

The coils for this channel are contained in a fully-shielded compartment beneath the chassis. The three coils for each stage are located in an individually-shielded section of this assembly in conjunction with their associated switch wafers, trimmers, by-pass condensers and connections to the corresponding tube socket. All connections are made as short and direct as possible to provide the utmost in electrical efficiency.

As shown in Figure 4, the signal enters the system through the small condenser in the probe handle. The capacity of the conductor in the cable to ground, plus circuit capacities is approximately 150 mmfd. This capacity is in series with the small capacity in the probe, so that a small fraction of the voltage at the prod tip is impressed on the 6SK7 grid when the Multiplier switch is in position 1. In position 10, additional capacity is added to the circuit, which makes the voltage applied to the grid 1/10 of that in position 1. Positions 100 and 1000 similarly decrease the portion of the test voltage which is applied to the tube grid. Variable resistance "R" is a cathode-bias control, which varies the gain of the first amplifier tube over a 1 to 12 range. The gain of the second and third tubes of the amplifier is constant. The output of the amplifier is detected by the 6H6 diode, and the rectified voltage is passed on to the output jacks and the grid of the 6E5 electron-ray indicator tube.

When measuring a given signal, constant amplifier output is maintained by adjusting the Multiplier and cathode-bias Attenuator until the indicator shadow is just closed, at the same time tuning the resonant circuits to the signal frequency. The number on the Attenuator multiplied by the Multiplier setting then gives the relative voltage of the measured carrier. The frequency is indicated on the gang condenser dial. The Multiplier and Attenuator are not calibrated in microvolts, but a signal which just closes the eye with Multiplier and Attenuator both set at 1 is approximately 5000 microvolts. Because the input capacity of the prod is so small, it has a negligible de-tuning effect on any circuit to which it may be connected.

The sensitivity of the amplifier can be increased approximately 100 times by using the direct-connected (audio) prod. The use of this lead will disturb tuned circuits, but it is satisfactory for checking antennas, or antenna coils, if the de-tuning effect is compensated for by re-tuning the gang condenser of the receiver.

The RF-IF section is useful for checking gain, distortion and noise in the R.F. or I.F. portions of receivers. It enables one to make listening tests at any point in the receiver ahead of the detector, or to make visual tests by means of a cathode-ray oscilloscope. If higher audio output is required than is furnished by the RF-IF channel, the audio prod may be inserted in the pin-jack at the right of the RF-IF section, and the signal amplified by passing through the amplifier in the "Audio" channel, the output being obtained from the output jack of the "Audio" channel. The voltage range can be increased by plugging into the pin jack, the test prod of the Electronic Voltmeter and observing the meter of the Electronic Voltmeter instead of the indicator on the RF-IF section itself.

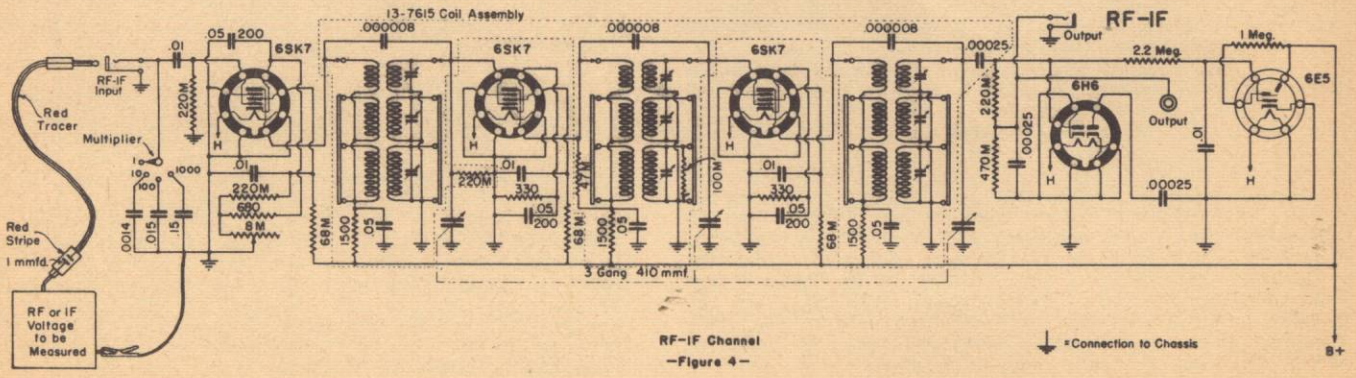


RF-IF Channel
—Figure 4—

*Connection to Chassis

### LINE CURRENT CHANNEL

The Line Current channel, at the bottom of the panel, consists of a current transformer, a calibrated attenuator, a diode voltmeter tube and an electronic indicator tube. The circuit is shown in Figure 5.

This channel is automatically placed in operation when the receiver under test is plugged into the A. C. receptacle at the left of the panel. A current transformer that converts the relatively high current at almost zero voltage drop to a much higher voltage, impresses this voltage across the attenuator network actuating the diode voltmeter tube and the attached electronic indicator. The calibrated resistive Amperes control provides the current reading directly, when the control is set to just close the shadow on the indicator. The current range is from 0.3 to 3 amperes which will cover practically any type of receiver.

Where the name plate on the receiver indicates only the wattage of the receiver, the current that the receiver should draw can be calculated approximately from the following formula: Current equals wattage divided by nine tenths of the line voltage.

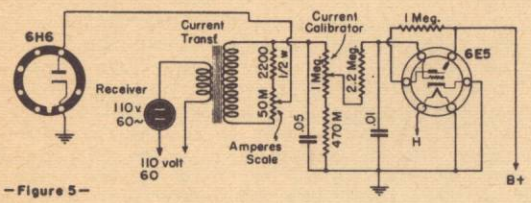


—Figure 5—

The nine-tenths factor is used because of the power factor of the average receiver. A close approximation, which is much more convenient to use, is to divide rated watts by 100 to obtain line current in amperes or decimal fraction thereof.

### ACCESSORIES

The most valuable accessory for use with the **Analyst** is a high-quality head set of the high-impedance type. The most ideal type is the crystal headset which has very high impedance and at the same time has much better fidelity than the conventional magnetic type. For this reason the former type is highly recommended. The price is relatively low so the Serviceman should, if at all possible, obtain a pair in order that he may get the best performance from his **Analyst**.

The second useful accessory is a cathode-ray Oscillograph, but if the Serviceman does not already have one, he is hardly justified in purchasing one exclusively for the benefit that he will get from its use in conjunction with the **Analyst**. The high-quality headset is far more important and will give him much more information about the receivers under test than will the oscillograph except in a few rare cases.

An ohmmeter, which practically every Serviceman has, is practically a necessity in service work. Strictly speaking, it is not an accessory to be used with the **Analyst**, but is the one additional instrument that must be employed to find the faulty component in the receiver after the **Analyst** has indicated that the trouble lies in a certain very restricted part of the receiver.

## *Servicing with the Meissner Analyst*

### TESTING ROUTINE

The Meissner **Analyst** is a powerful tool for the solution of service problems but for greatest utility and maximum saving of time in diagnosing troubles in receivers, a **definite systematic method of use should be adopted.**

Some successful servicemen attribute much of their success to little extra precautions taken to show that they realize the value of the receiver in the eyes of their customers. One such practice is to return the receiver in as neat and clean a condition as possible with the expenditure of a few moments with a dust cloth or a vacuum cleaner. If this, or other practices designed to promote repeat business are judged desirable, it is well to finish them first before starting on the testing and repair routine so that when the repair work is finished nothing further need be done that might accidentally disturb any of the adjustments made on the receiver.

The most logical first investigation of a receiver concerns the source of energy to operate it, for without the proper energy, no radio set can operate properly.

The second step is to trace the signal, step by step, until the fault is localized to a particular section of the receiver.

The third step is to find the actual defective or abnormal circuit element and restore it to its normal condition.

The fourth step, used by some Servicemen who guarantee their work for a reasonably long period of time, is to replace any item which their experience has shown them is quite likely to fail soon in a set of that particular make and age, or to replace any item that show signs of weakness leading to early failure.

The fifth step is to align the receiver or make any other obvious necessary adjustments to insure best performance for the maximum length of time.

### POWER SUPPLY

In accordance with the above outline testing routine, the power supply is tested first.

If the receiver is an AC model of the same frequency and voltage as the **Analyst** the name plate of the receiver should be inspected to determine the normal line current, or normal watts input, while the **Analyst** is warming up. The expected normal current, if not specified, can be quickly estimated closely enough by dividing the rated watts by 100. The "Amperes" control on the **Analyst** should be set to a value approximately twenty percent higher than the expected normal current and the receiver power cord plugged into the power receptacle at the lower left-hand corner of the panel. The receiver should be turned on, meanwhile watching the indicator tube in the Line Current channel.

If the indicator shadow closes and the bright areas in the indicator tube overlap, the receiver is drawing more than normal current and probably has a defect either in the power supply itself, or in some part of the receiver that is placing a heavy load on the power supply. It is hardly necessary to advise turning off the receiver **immediately** to avoid further possible overload on the tubes or other components.

If the indicator shadow changes but little when the receiver is turned on, the receiver is drawing much less than its rated power, which will usually mean either that the rectifier tube is burned out, dead or not making contact, or that there is an open circuit in the power supply. Perhaps the speaker plug is not making contact, the speaker field or a filter choke may be open or some other similar circuit interruption may be responsible for the small load on the power transformer.

In the case of excessive current input a convenient quick check is to remove the rectifier tube so that when the power is next turned on, the only load on the power transformer will be the tube filaments, dial lights and transformer iron losses. These combined loads usually do not reach one-third of the full-load current. If there should be a short circuit in the power transformer, it is quite likely that the input current with the rectifier removed will be nearly equal to the normal current.

The most usual location of failure is in the high-voltage winding itself. When this occurs, the two halves of the high-voltage winding usually show decidedly unbalanced voltages. The suspected unbalance can be quickly checked, using the Audio Channel in the **Analyst** to measure first one side of the high-voltage winding, then the other.

The combination of high input-current with the rectifier or all tubes removed, and unbalanced high-voltage output is a sure indication of power transformer trouble. A final check is recommended before removing the power transformer as defective. In the final check, all connections from the power transformer to the set, except the primary, should be disconnected. If the input current is still excessive with all connections open (except the primary), the power transformer is defective, and must be replaced.

There are only two conditions under which a good transformer with no load on any secondary winding can draw excessive primary current:

1. Operating on a frequency lower than that for which the transformer was designed. As, for example, a 60-cycle transformer operating on 25-cycle current.
2. Operating on a line voltage considerably in excess of the voltage for which the transformer was designed, as for example, a 120-volt transformer operating on 220 volts.

If the name plate on the receiver is read carefully there should never be any mistake made because of either of these conditions.

In the case where a very low input current is drawn, the rectifier tube should be checked for possible burned-out filament, which is quickly done by visual inspection of glass tubes to see if the filament is glowing or by feeling the temperature of the metal envelope in the case of metal rectifier tubes, or by testing the filament for continuity in the usual manner.

In the case of a burned-out filament, it is logical to expect an unusually heavy load on the rectifier in the form of a short circuit or other defect in some component that has a relatively high voltage impressed thereon.

If the set has been idle for a long time before the defect developed, it is not unlikely that the electrolytic condensers have lost a large part of their film formation, and that excessive current was drawn from the rectifier in an attempt to form the film up to the normal operating voltage of the condensers. This phenomenon is usually much more pronounced in wet electrolytic condensers than in the dry type. The condition of the electrolytic filter condenser should be determined with a condenser test set or an ohmmeter (observing proper polarity) and condensers that have lost most of their film formation should be replaced. After checking the electrolytic condenser, the entire "B" circuit should be checked for a possible short circuit by measuring its resistance to ground with an ohm-meter. A short circuit is immediately obvious from the meter indications, and can be hunted without endangering the new rectifier tube if the entire "B" circuit is checked carefully while noting the resistance from plus "B" to chassis.

When the current input is abnormally low, the rectifier tube may have lost its emission and should be tested or temporarily replaced with another tube known to be good. If the tube is good and still low input current is drawn there is an open circuit in the "B" supply which must be traced until the open circuit is found and corrected. In this testing, it is convenient to use the Electronic Voltmeter which is a part of the **Analyst**.

If the receiver is not AC operated, the power source should be checked in any manner appropriate to the type of power supplied.

## SIGNAL TRACING

It has already been explained that the fundamental idea in the use of the **Analyst** is to trace the signal through a radio receiver to check its strength and quality at each point at which the signal appears.

Starting from an antenna providing a program from a local station or a signal generator providing a constant note test signal, the operation of the antenna coil (on the long-wave or broadcast band) can be checked by connecting the RF-IF section of the **Analyst** first to the antenna, then to the high-potential side of the first tuned circuit, noting the difference in voltage at the two points.

Actually in making the above test, the voltage is measured between chassis and grid and between chassis and antenna. The ground clip of the **Analyst** is therefore attached to the chassis of the receiver and the RF-IF prod touched first to the antenna, the Attenuator and Multiplier set to the lowest numbers to give greatest sensitivity to the TRF amplifier and the dial tuned to pick up the signal. Resonance may be found either by listening with headphones in the output jack of the RF-IF channel or by observing the associated indicator tube. When the prod is first transferred to the high-potential side of the first tuned circuit, it will be necessary, of course, to tune the receiver to the frequency of the signal if that operation had not previously been done. In a rapid test, the audible difference in output between the antenna and the first grid will probably be an adequate indication of proper performance of the circuit but if more accurate information is desired, the Attenuator can be set to just close the indicator tube shadow during each test and the Attenuator setting observed, and dividing the larger Attenuator setting by the smaller will give the approximate stage gain.

In a TRF receiver this process is followed from the first grid to the detector, checking gain and quality at each step.

In a superheterodyne, the same procedure is followed up to the Mixer grid. In the very popular two-gang receivers the first grid is the Mixer grid and consequently only one test at RF is possible. If the receiver has a three-gang condenser, using an RF stage, the gain should be checked from antenna to RF grid and then to Mixer grid. Three-gang receivers without an RF stage employ a pre-selector which may be analyzed either in one step or in two, which ever seems most desirable. Usually it will be found expedient to analyze this circuit with only one step since there is usually little that fails in a pre-selector circuit. If the results look peculiar, the measurement of gain from the antenna to the first tuned circuit can be made to verify any peculiar results found on the over-all measurement of the complete pre-selector circuit. Superheterodynes with four-gang condensers are somewhat rare but can be analyzed in a similar fashion up to the Mixer grid.

In a TRF receiver, the signal reaches the detector before changing its frequency, after which the signal is in the audible range and another part of the **Analyst**, the Audio section, must be used for further analysis, but in a superheterodyne, the frequency of the signal changes in the Mixer tube, coming out at intermediate frequency (if at all) and this frequency is still in the range of the RF-IF section of the **Analyst** but at a different place on the dial.

The probe should be held on the first IF grid and the RF-IF tuner dial and range switch rotated to the approximate frequency of the IF amplifier, if the frequency is known, or the intermediate frequency may be determined by tuning until the signal is picked up. In either case, the tuning should be adjusted for maximum response, and the Attenuator on the RF-IF section adjusted to give appropriate sensitivity. It is to be noted that in the output of any Mixer there are at least four frequencies, the signal, the oscillator, the sum of the two and the difference between the two. If the set is badly out of alignment, one or more of the undesired frequencies may be picked up. It is well, consequently, to listen to the signal selected, and to observe its frequency to be sure that the correct frequency has been selected. The amplified signal (which is not the desired signal) is easily recognized because it is picked up at the same setting that was employed in testing the antenna. The oscillator is easily identified by its lack of modulation and the sum frequency is usually so high that it will not be found. The difference frequency, which is the desired frequency, is the only frequency except the signal frequency that is likely to be picked up **and that has the same modulation as the signal**. Having properly adjusted the **Analyst** to the intermediate (difference) frequency, the signal should be traced through the IF amplifier to the second detector.

Should the signal fail to appear at the first IF grid, the failure to appear may be due to a failure of the Mixer to deliver any IF signal to the IF transformer, or because it delivers the **wrong intermediate frequency**, or because a failure prevents the transformer from delivering the signal. The simple tests to diagnose trouble in the Mixer circuit are discussed in the section on "Mixers."

If the Mixer and oscillator are functioning properly and the input IF transformer is satisfactory as evidenced by the presence of a signal on the first IF grid, the signal should be traced through the IF amplifier to the detector.

If the signal voltage can be traced through the receiver to the second detector, the RF-IF and the Oscillator sections of the **Analyst** have served their functions properly. Further tracing must be done with the Audio channel of the instrument. The latter portion of the instrument consists of an attenuator, amplifier, and voltmeter tube as described in the first part of this book. With it, the signal can be traced from the second detector through all parts of the audio system even to the voice coil. In some receivers it has been found that the signal was clear and undistorted at the voice coil terminals, but the sound reproduced by the speaker was badly distorted. The ability to trace the signal right up to the voice coil thus quickly established the fact that the trouble was not in the receiver at all but happened when the electrical impulses were converted into sound by the speaker.

The above description of tracing a signal through a receiver has pointed out a few of the troubles that might occur, but has not attempted to describe any particular

case of trouble and its method of solution because if the Serviceman can locate the site of the trouble by finding the place where the signal either disappears, gets weak, or becomes noisy or distorted, it is assumed that the **Analyst** has performed its chief function. The location of the actual circuit defect such as an open or short circuit, a leaky condenser, a defective volume control or the like is the part of the operation where the Serviceman must use his knowledge of circuit theory and of service failures to help him locate the item. Obviously, all of the possible service troubles, nor even a reasonably large percentage of them, can be described in detail with examples given, but some of the most common faults in each of the representative circuit elements are given in the following pages.

### ANTENNAS

The performance of an antenna can easily be checked with the **Analyst** either as to its ability to pick up an adequate voltage of the desired frequency, or as to the amount of noise picked up. The RF-IF section of the **Analyst**, as explained previously, is a three-gang TRF receiver (without antenna coil) but with an audio amplifier and output meter (tuning indicator) attached. To obtain maximum sensitivity in testing an antenna, the black-coded (Audio) test lead is used to connect the antenna to the RF-IF section of the **Analyst**. The ground lead may be connected to any convenient ground connection, or it may be left unconnected, in which case the power lines act as a ground which is a very common practice when installing receivers. The tuning dial is then rotated to tune in the desired station, and the Attenuator and Multiplier manipulated to just close the indicator shadow if an accurate idea of the signal strength is to be obtained. In some cases where there is a strong station of undesired frequency in operation when the test is made, there may be modulation of the desired signal by the strong undesired signal because there is no preselection ahead of the first tube in the RF-IF test channel. Usually this will not greatly interfere with measurement of pickup, however.

### ANTENNA COILS

Antenna coils, of themselves, are rather simple devices, unless there are image-suppression circuits incorporated in them. Their causes of trouble are simple and easily recognized. Their characteristics are sufficiently uniform to permit easy recognition of a defective unit. Their normal gain in a household receiver is from 3 to 10, and in an auto radio, from 8 to 40, the latter high gains being obtained from coils with low-impedance type coupling means such as a tap on the secondary a few turns from the bottom end of the coil, or such as the low-impedance capacity-coupled type frequently referred to as "Hazeltine" antenna coils.

The most common causes of antenna coil trouble are:

1. Burned out primaries due to lightning striking the antenna or due to the antenna falling across an uninsulated power line.
2. Broken leads from the windings to the lugs caused by excessive vibration or by actual movement of the lugs.
3. High-resistance secondaries due to broken strands in Litz-wire windings, where used.
4. Shorted windings or lugs due to poor placement of leads during the manufacture of the coil, or due to poor workmanship and inspection during the assembly of the receiver, or due to foreign metallic particles lodging between lugs or bare conductors causing the short circuit.

The circuit may fail to perform properly due to conditions external to the coil such as the following:

1. AVC condenser open, thereby preventing the circuit from tuning.
2. Shorted cathode by-pass condenser or other fault removing the bias from the tube thereby permitting current to flow due to "Contact Potential" and putting a load on the tuned circuit.
3. Leakage or short circuits from grid to any other element in the tube or to ground.
4. Broken connection or defective range switch interrupting the tuned circuit.
5. Shorted gang condenser or trimmer.

The **Analyst**, a signal source, and an ohmmeter should permit the rapid solution of any of the troubles listed above

It is important to realize the difference between testing the antenna coil itself, and testing the coil with respect to the performance of the remainder of the receiver. In testing the coil without reference to the remainder of the receiver, the RF-IF section of the **Analyst** is first tuned accurately to the signal source when the prod is connected to the signal source, and then when the prod is connected to the tuned circuit, the **receiver dial** is tuned for maximum response on the RF-IF indicator tube, not for maximum response from the receiver. When the receiver is tuned for maximum response, and the receiver is a superhet, the oscillator and the IF system will determine the tuning almost irrespective of the antenna coil performance, therefore if the oscillator coil is not tracking well with the antenna coil, the latter coil will be as badly mis-tuned as the oscillator is mis-tracked, and a gain measurement under such conditions will not do justice to the possible performance of the antenna coil.

### TUBES

A consideration of the methods of testing the first tube in the receiver opens up the entire subject of tracing signals through tubes of all types. There are a few fundamental ideas about tubes that, if well understood, will be quite valuable in locating faults.

1. If a tube is working normally a reasonably exact reproduction of any voltage applied to the input of the tube will be found across any impedance placed in the plate circuit of the tube.
2. The reproduced voltage may be either greater or less than the impressed voltage depending upon the mutual conductance of the tube and the magnitude of the impedance in the plate circuit **to the impressed frequency.**
3. If the impedance in the plate circuit is essentially constant over the frequency range of the impressed signals, the output frequencies should bear the same relation to each other as the input frequencies bear to each other.
4. If the impedance in the plate circuit changes radically over the frequency range of the input signals, the output frequencies to which the plate impedance is the highest will show the greatest amplification.

With the above ideas in mind, it is obvious that if a signal voltage is impressed on the grid of a tube, such as the RF amplifier tube, a voltage at signal frequency must appear at the plate of the tube if it is working. Since this is true it is possible to definitely prove whether the failure of an RF or IF transformer to deliver output voltage is due to a defect in the transformer or whether the transformer is not receiving voltage at its primary terminals.

### RF COILS

RF coils are very much like antenna coils in many respects and can be expected to have similar types of trouble and require similar methods of checking. There is this one important difference between antenna and RF circuits however: the gain of the antenna coil is independent of the AVC voltage on any tube, since the gain is measured from the antenna to the first grid. Thus no tube is included in the measured circuit and the gain of the circuit will not be changed by the bias on the first tube (unless the tube loses all of its bias and constitutes a load on the tuned circuit).

In the case of the RF coil the measurement is made from the grid of the RF tube to the grid of the next tube. The measured circuit therefore is influenced by the AVC voltage on the tube included in the measured circuit. For highest gain a weak signal should be employed so that the AVC voltage is a minimum and the sensitivity is a maximum. Under these conditions the average gain of an RF stage in a two-gang TRF receiver may be as high as 75. In receivers of the same type but with more stages the gain-per-stage is lower, dropping down as low as 25 in receivers with four gangs. Multi-band superheterodyne receivers may have an RF stage-gain even lower, and may be as low as ten. This low gain is chosen purposely so that the sensitivity on the broadcast band will be about equal to or less than the sensitivity on the high-frequency bands. The reason for this choice is that there is a great deal more thermal noise generated in the Broadcast-band antenna coil than in the Short-Wave-band antenna coils and the receiver may therefore be made more sensitive on the Short-Wave bands than on the Broadcast band before internal set noises limit the useful sensitivity.

## OSCILLATOR COILS

The conventional oscillator coil is an even simpler device than the average antenna or RF coil. The method of checking the coil itself need hardly be explained. An ohmmeter is usually all that is necessary.

To prove that an oscillator is working, it is only necessary to touch the probe of the Oscillator channel of the **Analyst** to the stator connection of the oscillator tuning condenser, and at the same time, with the Attenuator set for maximum sensitivity, the dial of the Oscillator channel, is rotated to see if any oscillator voltage is picked up at any frequency within the range of the **Analyst**.

If a voltage is picked up, its frequency can be measured most accurately if the oscillator probe is placed not on the stator connection itself but merely close to it, so as to disturb the circuit least. When the oscillator probe is so placed, the pickup from the oscillator circuit may be so low that the indicator shadow will not close completely and, in fact, may give only a slight flicker as the tuning dial is rotated through resonance, but enough indication will be obtained to determine the oscillator frequency.

Another method of checking for oscillation, but one that gives no hint of the operating frequency, or a method that may be used for checking oscillators out of the tuning range of the **Analyst**, is to check the voltage developed across the grid-leak of the oscillator, if it has one. For this test the prod of the Electronic Voltmeter channel is touched to the grid of the oscillator tube and the voltage measured. The isolating resistor in the prod handle should prevent the measuring circuit from having any influence on the oscillator unless it was in a very unstable condition on the border line between operating and not operating. If this method of testing is used it is always advisable to perform the test in two parts. First, check the voltage across the grid-leak, then short-circuit the oscillator tuning condenser to observe that the voltage drops to zero when the condenser is short-circuited, proving that the voltage measured is actually caused by the oscillation.

The fact that an oscillator works and delivers the proper amount of output voltage does not necessarily mean that the oscillator circuit is free from trouble. It may be operating at an incorrect frequency due to some fault in the padding circuit, or in the switching of pads in multiple-wave receivers. In high-frequency oscillator circuits, the frequency is sometimes incorrect because a by-pass condenser has opened up, increasing the length of conductor in the circuit which can cause quite an appreciable effect when the frequency of the circuit is high enough, because a large part of the circuit inductance is in the leads themselves.

If the receiver is operating properly up to and including the Mixer, the oscillator frequency should be equal to the sum of the intermediate frequency plus the input-signal frequency.

## MIXERS

If a signal is traced to the mixer grid and yet no signal can be picked up on the first IF grid, the failure may be due to several causes.

1. The mixer tube may be defective or may be inoperative due to absence of proper operating voltages.
2. The oscillator may not be working.
3. The oscillator may be operating at the wrong frequency, delivering an intermediate frequency that will not pass the IF transformer.
4. The IF transformer may be defective.

The first condition may be checked easily by placing the RF-IF probe on the plate connection of the mixer tube and tuning the RF-IF channel to the signal frequency. Even though the plate circuit is not tuned to that frequency, some signal should be picked up. A lack of voltage at signal frequency is fairly good evidence that the tube is not amplifying, either because the tube is defective, because there are some open connections to the tube, or because the set is not supplying the proper voltages to the tube. A new tube can be tried to check the first idea, and the second and third ideas can be checked with the "Electronic Voltmeter."

If a voltage at signal frequency is picked up in the plate circuit of the tube, but no other voltage is found at any frequency, it is quite likely that there is no oscillator voltage being injected into the Mixer either by internal coupling, as in the case of pentagrid or composite oscillators, or from a separate oscillator tube as in the case where there is no oscillator action within the mixer tube. In the former case, the oscillator is obviously not working, while in the latter case the oscillator may be working but some circuit fault may be preventing the oscillator voltage from being injected into the Mixer. In the latter case, the oscillator should be checked, as described in the section on Oscillators.

If a voltage is found at a frequency that does not correspond to the intermediate frequency of the receiver, the oscillator is working at the wrong frequency producing a signal that will not pass the IF transformer. In such a case the oscillator is mis-tracked, perhaps due to a natural drift in the oscillator padding or trimming condensers, or because of a failure in the padding circuit either by a shorted padding condenser if the frequency is below the normal intermediate frequency, or by a partially open condenser if the frequency is higher than the normal intermediate frequency.

If a voltage is picked up at the proper intermediate frequency at the plate of the mixer tube and no voltage appears at the first IF grid the transformer is obviously defective.

## I. F. TRANSFORMERS

I. F. Transformers may be divided into the following general classes: untuned, single-tuned, double-tuned, triple-tuned, discriminator, band-expanding and special transformers that have some feature peculiar to themselves to accomplish some special purpose. A few examples of the latter type are transformers with taps to reduce the impedance connected into the plate circuit of a tube, or with a tap to reduce the voltage output, or transformers with one or more extra windings, untuned but closely coupled to a tuned circuit to accomplish the isolation of the low side of a circuit carrying I. F. voltage, so that delayed AVC may be obtained, or some other special feature accomplished.

All the above transformers serve the purpose of presenting to the plate circuit of one tube, an impedance appropriate to develop output voltage across this impedanc and to transfer some of these voltages to the next tube. The band-width of frequencies passed on to the next tube is a function of the amount of selectivity in the circuit or circuits coupled to the primary.

The troubles likely to occur in IF transformers are very much like those that can occur in RF coils and the method of checking the circuits is quite similar. It is again the process of tracing the signal until the point is discovered where the voltage disappears, gets weak, becomes distorted or becomes noisy. The normal gain for input IF transformers converting from RF voltage on the grid of the Mixer to IF voltage on the grid of the first IF tube varies with the design of the receiver from 20 to 100 but may vary even outside these limits in some designs. Output IF transformers for sets with only one IF stage usually have gain from IF 30% modulated at the last IF grid to audio signal at the detector output of 50 to 100. In making these tests, as in the case of RF stage gain, the signals must be weak enough that the AVC is inoperative or the AVC circuit should be blocked while the measurements are being made.

The most likely trouble with IF transformers is electrolytic corrosion of the primary winding. This is particularly true in damp climates and in receivers having little heat dissipation, such as battery-operated receivers using 2-volt or 1.4-volt tubes and obtaining their "B" supply from batteries.

Noisy IF transformers are frequently the warning that failure due to corrosion is about to take place but this condition is not always true.

## A. V. C.

When a service oscillator is available, the AVC action of the receiver should be checked since sometimes the trouble in a receiver can be caused by a failure in that circuit. With the generator connected to the antenna and ground terminals of the receiver, the Electronic Voltmeter should be connected to each grid in turn in the RF or IF sections of the receiver and the AVC voltage measured at each grid at various input-signal levels. Since there is no hard and fast rule that

can be set down concerning the number of tubes controlled in a receiver, or the percent of available AVC voltage applied to each tube, the only general statements that can be made are the following:

1. In a receiver with one IF stage it is the usual practice to apply full AVC voltage to the IF, Mixer and RF tube (if any). Sets having composite oscillators usually have no AVC on the Mixer (composite oscillator).
2. In receivers with two IF stages it is frequently the practice to apply only a portion of the available AVC voltage to the second IF tube. This portion is usually one-half or one-third. In some receivers of this type no AVC voltage is applied to the last IF tube.
3. In high-frequency receivers, or on the higher frequency bands of multi-wave receivers the AVC voltage is frequently removed from the Mixer circuit.

### TESTING SHORT WAVE OPERATION

The **Analyst** contains equipment for cnecking the antenna and RF portions of a Broadcast receiver or the Broadcast portions of a multi-wave receiver, but it does not have facilities for checking the RF section for short-wave operation. A device is provided, however, for checking the operation of the short-wave oscillator up to 15,000 kc. If the set does not function on short waves, the oscillator is working properly over its entire range, and tests on the Broadcast band indicate that the receiver is working properly overail on that band, it is obvious that the failure on Short Waves must be ahead of the mixer tube. With the trouble localized to that extent, it should be relatively simple to locate the actual defect.

### INTERMITTENT OPERATION

The Analyst is particularly adapted to solving the troubles that exist in receivers that are intermittently operative, that is, receivers that "cut out" for no apparent reason. If servicing is attempted by the ordinary methods, the mere connection of test instruments frequently restores the set to its normal operating condition and many hours of effort are sometimes necessary before it is possible to locate the faulty unit.

By means of the **Analyst**, which has five indicators to check the performance of the receiver at as many strategic points simultaneously, it is possible to localize the fault to a certain portion of the receiver the **first time** that the signal fades.

Figure 6 shows a block diagram of a conventional superheterodyne receiver and the points where the various channels of the **Analyst** are normally connected for the first test on an intermittent receiver. Figure 7 shows, in a similar type of diagram, the most logical places to connect the indicators to a conventional TRF receiver.

The controls can be set so that all four indicator shadows just close and the Voltmeter reads the AVC voltage. Then, if a fault occurs, the appearance of some, or all, of the indicators will change, indicating the portion of the receiver in which operation is not normal. In other words, all of the necessary test instruments are connected to the receiver before the fault occurs so that they may be observed during the faulty operation of the receiver without disturbing the set. Formerly the disturbance occasioned by connecting test instruments frequently restored normal operation, and stopped any chance of finding the defective part until the next fade, at which time again the process of testing may have restored normal operation making it virtually impossible to find the defective part except by sheer good luck or by the expenditure of a prohibitive amount of time.

If the last indicator that shows normal signal, and the first indicator that shows abnormal signal, are separated by several circuits or stages, it is usually possible to attach the test prods to points closer together for the second test to restrict the part of the receiver under test so that on the second fade the defective part can be located more closely. Sometimes a third operation is possible, narrowing down still more the region that must be closely inspected for the faulty unit, but usually the region is so restricted by the second test that it is a simple matter to locate the defective part.

The points to which the indicators are connected for the second test will occur naturally to the Serviceman after observing which indicators showed abnormal signal in the first test.

### NOISE

Noise in a radio receiver may come from any one of the following sources and perhaps more:

1. Noise in the transmitted program, which is very rare except for undesired hum that often accompanies the use of temporary lines to connect an outside pickup to the studio. This is especially likely to happen if a storm has disrupted the normal line service.
2. Noise picked up on the antenna with the signal. Such noise is generally locally produced by sparking electrical equipment such as elevator control panels, X-Ray equipment or diathermy machines. Occasionally static generated by heavy belts on rotating machinery may cause trouble but usually the atmospheric conditions must be exactly right for the production of enough electricity to be objectionable. Smoke and dust precipitators and ozone generators frequently produce considerable interference if the antenna is close enough to such sources.
3. Noise voltages may be strong on the line supplying power to the radio set, and since many receivers use no ground connection but rely on the power lines to provide a ground connection, any noises on the line arriving at the receiver travel through the primary of the antenna coil out onto the antenna and produce in the receiver almost as much noise as if the noise had originated in the antenna and traveled through the conventional path to ground.
4. Noise of thermal agitation is produced in the conductors of all the tuned circuits, but only that produced in the first circuit is usually of any importance since the noise produced at that point has the maximum amount of amplification following it. The first, and in some cases the second tube, produces so much noise that the noise contributions of the second and succeeding tuned circuits can usually be neglected. It is only when listening to very weak signals that this type of noise is bothersome. It is this noise that limits the ultimate useful sensitivity of a receiver.

   Occasionally a receiver will give evidence of this kind of noise and will give a weak response on a strong local station. When this occurs it is quite certain that there is some interruption of the signal that prevents the receiver from deliver-

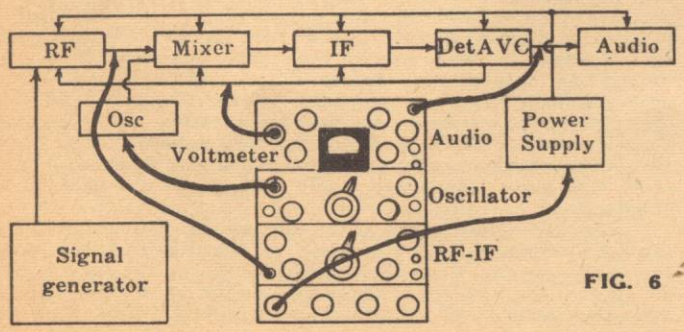


FIG. 6

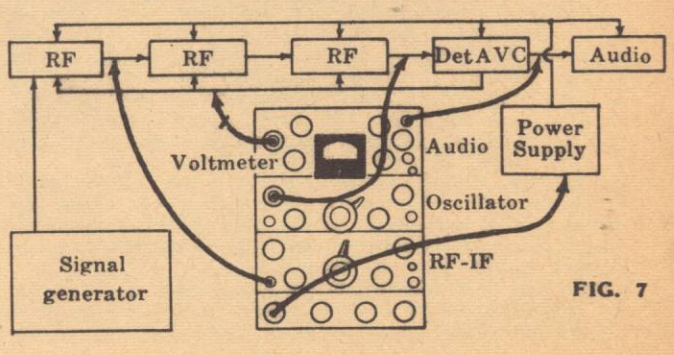


FIG. 7

ing a normal signal to the first grid, or even to the second grid (in receivers with high sensitivity).

5. Noise may be actually generated in the receiver by high-resistance leakage paths across high-impedance tuned circuits. This leakage may be inside of a vacuum tube or may be across any piece of low-grade insulation that happens to be located in a strategic place .
6. Noise may be generated by some of the more common agencies such as loose welds in the tubes, loose connections in the receiver, or may even be generated by such agencies as the voice coil of the speaker short-circuiting to the pole piece as it vibrates. High powered receivers have even been seen to generate sparks in the air-gap of the speaker as the voice coil rubbed against the pole piece with one side of the circuit purposely grounded because of certain design considerations.
7. Noise may be generated sometimes only when some part is in motion, as a tuning condenser that is barely short-circuiting as it is turned, the wave-band switch may have dirty contacts, the wipers on the condenser shaft may be dirty, or on a sensitive receiver, the motion of some parts in the drive may generate noise by intermittent contact in much the same way as a screwdriver point drawn lightly over the chassis of a sensitive receiver will generate noises that are reasonably loud if the set is operating at maximum sensitivity.

In testing the receiver for noise, the same signal-tracing procedure is followed as in the case of checking a signal, but in this case the receiver is tuned to no station so that the noise may be heard most strongly. The point in the set at which the noise first makes its appearance can easily be found and appropriate steps taken to remedy it.

In the case of a strong hum on all stations in place of an intermittent crackling noise, it may be necessary to make the test with the receiver tuned to some station because the hum modulation may not occur without the presence of a carrier.

## DISTORTION

Distortion can occur in almost any tube in a receiver. It is usually confined, however, to the stages working at relatively high levels such as the diode driver tube, the detector or the power output tubes. The place where the distortion occurs can easily be found by careful listening with the aid of the appropriate section of the **Analyst** in exactly the same fashion as tracing a signal through the set to check for appropriate gain-per-stage. If an oscillograph and a signal generator are available, the constant tone and wave shape of the signal from the signal generator may be applied to the input of the receiver and the oscillograph may be used in conjunction with the appropriate channels of the **Analyst** to check the wave shape at each tube in the receiver. This method is particularly recommended to those Servicemen who have little ability to recognize distortion or who may have defective hearing. In such cases it will be necessary for the Serviceman to have someone with keen hearing listen to a signal that looks mildly distorted on the oscillograph and obtain some idea of how badly distorted a wave may be before it sounds objectionable to some one with good hearing.

Three of the most likely causes of distortion are listed here below:

1. Leaky coupling condensers in the audio circuit decrease the normal bias of the tube whose grid is connected to the defective condenser. In some cases the leakage is large enough to make the grid actually positive which will make the quality very bad and in many cases will quickly ruin the tube, especially if the tube is an output tube. The excessive current drawn may damage the rectifier tube or power transformer as well.
2. An open fixed tone-control condenser in the plate circuit of a pentode output tube will allow the harmonics generated in the tube to be reproduced in accentuated amount causing a particularly objectionable type of distortion.
3. At high signal levels, receivers having a diode detector may show bad distortion at the diode or at the plate of the diode driver tube because of the inability of the tube to drive the diode when operating with high AVC voltage. The remedy in many cases is to divide the AVC voltage and apply to the doide driver tube only one-third to one-half of the available voltage.

## SPECIAL CIRCUITS

In receivers employing separate AVC amplifier or detectors for the purpose of supplying amplified or delayed AVC action, the process of tracing the signal is no different than in the conventional receiver, except that there is the additional branch circuit to trace.

In receivers employing AFC there is almost always a switch to place the set in conventional operation in which state it is as easy to trace the progress of the signal as in the standard type of receiver. Having proven the operation of the circuit satisfactory in the conventional arrangement, it is then easy to check the action of the AFC circuit.

Receivers employing "Q" or noise-suppression circuits can be traced through at relatively high signal inputs so that the suppression circuits are sure to be unlocked if working properly, and then the action of the suppression circuit may be checked by means of the Electronic Voltmeter as the signal level is changed permitting the suppression circuit to operate.

## ALIGNMENT WITH THE ANALYST

For alignment purposes, the **Analyst** can be conveniently used either with a calibrated test oscillator or with a received signal of known frequency. If the receiver to be aligned is of the TRF type and has merely drifted out of adjustment it will probably have enough sensitivity to operate the speaker when the signal is fed into the antenna and ground terminals of the receiver. In such a case, the Audio prod is connected to some convenient point in the audio system furnishing audio voltage, and the Audio channel used as an output meter. The receiver is then aligned in the conventional manner.

If the receiver is quite far out of adjustment or if no signal is available strong enough to give output from the speaker for alignment purposes, the RF-IF section of the **Analyst** may be used in the following manner: Set the receiver dial to indicate the frequency of the station or signal used for alignment. Set the gain controls on the RF-IF channel for maximum sensitivity. Connect the prod of the RF-IF section to the plate of the first tube in the receiver and tune the RF-IF amplifier to the frequency of the desired station. The antenna trimmer is then adjusted for maximum signal. The prod may then be moved to the second plate circuit and the second grid circuit aligned. This procedure may be followed as far as necessary, reverting to the Audio channel as an output meter if more convenient.

If the receiver is a superheterodyne the RF-IF probe should be clipped to the plate of the mixer tube, the receiver dial set to the known frequency of the signal used (somewhere near 1400 kc or any other frequency specified by the manufacturer as the alignment frequency), the **Analyst** tuned to the same frequency, the oscillator blocked by short-circuiting its tuning condenser, and the antenna and RF trimmers, if any, adjusted for maximum response. The RF-IF channel should then be tuned to the intermediate frequency specified by the manufacturer, the short-circuit removed from the oscillator tuning condenser and the oscillator trimmer adjusted until the signal in the RF-IF channel is maximum. The **Analyst** is then tuned to a signal near 600 kc when the prod is connected to the antenna. The prod is then moved to the mixer plate, the oscillator stopped and the receiver tuned for maximum response. The **Analyst** is then set to the same intermediate frequency as before and the oscillator padding condenser adjusted for maximum response in the **Analyst**. Since the 600 kc adjustment changes the 1400-kc adjustment slightly, it is wise to readjust the trimmers at 1400 kc. By following the above procedure it is not necessary to rock the gang condenser while adjusting the padding condenser.

The IF amplifier is then aligned by adjusting the input-IF trimmer with the prod of the RF-IF tuner on the plate of the first IF amplifier. If the set has two IF stages, the prod is then moved to the second-IF plate and the second IF transformer trimmed. The Audio

prod is attached to any convenient point in the audio system for adjustment of the output-IF amplifier.

### AC-DC RECEIVERS

In normal operation, on an AC receiver, the ground clip of the **Analyst** is attached to the chassis of the receiver and permitted to remain there during the entire testing of the receiver. When AC-DC receivers are tested it must be remembered that the operating circuits of the receiver are not isolated from the line and therefore the **Analyst** cannot be connected to the chassis or the minus "B" connection in the receiver and at the same time rest on a grounded metal table without excessive danger of trouble. If all parts of the work bench and the floor are of insulating material or of DRY wood and there are no grounded objects around such as a radiator or sink, it is reasonably safe to use the **Analyst** on AC-DC sets with the same facility as on straight AC sets, but it would be unquestionably better practice to use a well-insulated one-to-one ratio isolalating transformer to supply power to the **Analyst** and to the AC-DC receiver.

## PERIODIC ADJUSTMENTS

As in almost any electronic instrument, an occasional adjustment is necessary to assure its greatest accuracy. Instructions are given below for making the necessary adjustments to keep the Meissner Analyst always at peak efficiency.

The Electronic Voltmeter circuit, once properly adjusted, will hold its adjustment for long periods of time. If, however, it becomes necessary to replace the 6C5 voltmeter tube, a slight re-adjustment will be necessary to assure the greatest accuracy.

The Electronic Voltmeter has two adjustments, the Zero Set on the front panel, and the Voltmeter Sensitivity Adjustment at the rear of the chassis. The simplest method of adjustment is as follows:

With the Range Selector set for the 5-0-5 volt scale, adjust the Zero Set for zero reading on the meter and apply the prod to a known voltage of 4 to 5 volts. This voltage may conveniently be a 4½-volt "C" battery whose voltage has been previously measured with a conventional 1000-ohms-per-volt metel. If the meter does not indicate the correct voltage, adjust the control on the rear of the chassis until it does. Remove the prod from the battery and re-adjust the Zero Set control for zero meter reading. For greatest accuracy, this procedure should be repeated several times, adjusting the Sensitivity Control on the rear of the chassis with the prod on the battery, then adjusting the Zero Set control with the prod removed from the battery. This is advisable because each of these controls has some effect on the other.

The Voltmeter, once adjusted on the lowest scale, is subject to further small errors on the higher scales because of the tolerance on the resistors making up the multipliers. Even with the errors caused by slight deviation of the multiplier resistors from their theoretically correct values, the voltage values read on high-impedance circuits are usually a great deal more accurate than with an absolutely accurate meter of 1000-ohms-per-volt resistance connected in the same place. The latter instrument would load the high-impedance circuit so heavily that the meter would not give indications representing operating circuit conditions but would read the **disturbed condition** caused by the voltmeter loading.

Greater accuracy on the multipliers is possible with wire-wound resistors but the cost is prohibitive when resistances of such high value as ten megohms are used.

The Oscillator section is operative without adjustment but has trimmer condensers so that each range may be made to indicate the frequency to which the oscillator section is tuned. Since the frequency of a signal is sometimes the only evidence of trouble in a receiver, it is wise to adjust calibration as accurately as possible. Signal generators that have been in use for some time should not be relied upon to be correct in frequency, but should be checked for accuracy before being used as frequency standards for adjusting the calibration of the ANALYST.

The range switch should next be set to the proper band, the black test cable should be plugged into the Oscillator input jack, the prod connected to the output terminal of the signal generator and the ground lead from the ANALYST connected to the ground post of the signal generator. The attenuator should be turned counterclockwise, the dial and the signal generator should be set to the proper calibrating frequency and the corresponding trimmer on the small coil adjusted for minimum shadow angle. If the generator output is more than enough to close the shadow, the attenuator should be adjusted so that the eye nearly closes, since a narrow shadow angle promotes accuracy of adjustment. The aligning frequencies and trimmer positions are given below.

| BAND | CALIBRATING FREQUENCY | TRIMMER POSITION |
|---|---|---|
| 1 | 12.0 MC | Bottom |
| 2 | 4.0 MC | Middle |
| 3 | 1.4 MC | Top |

The **black** test lead is used in the operation above to get enough sensitivity to operate from the signal generator. Ordinarily when checking the voltage from an oscillator tube, the **brown** test lead should be used.

The RF-IF channel requires practically the same accuracy in frequency calibration as the Oscillator section. Accordingly, a signal generator should be used in adjusting the RF-IF channel so that it has an accurate frequency calibration.

The connections from the signal generator to the ANALYST are the same as for the Oscillator adjustment except that the cable with the **red** tracer is used and is plugged into the input jack of the RF-IF test panel.

The RF-IF tuning assembly consists of a three stage TRF amplifier without an antenna coil and is aligned in exactly the same manner as a TRF receiver.

The range switch should be set to the desired range, the RF-IF tuning knob and the signal generator set to the proper aligning frequency and the trimmers adjusted for minimum shadow angle on the RF-IF tuning indicator. The trimmers are reached through holes in the coil shield. The isolated holes at one edge of the unit are for band 1 trimmers, the center holes for band 2 and the remaining holes are for band 3. The aligning frequencies are listed below:

| BAND | ALIGN AT |
|---|---|
| 1 | 200 KC |
| 2 | 530 KC |
| 3 | 1400 KC |

As the aligning progresses and sensitivity improves, the attenuator and multiplier should be adjusted to keep the indicator shadow angle very narrow, thereby obtaining greatest sensitivity of indication.

In order to calibrate the Line Current indicator with the greatest precision, an accurate AC ammeter is necessary, but since the normal power consumption of most receivers is not accurately known, the necessity for extreme accuracy is less urgent on this calibration than on some of the other calibrations. Therefore if an AC ammeter is not available, the calibration can be made with acceptable accuracy by setting the calibrating controls when a soldering iron of known power input or a lamp of known wattage is connected to the power socket in the ANALYST. The current drawn by any resistance load such as a lamp or soldering iron is quickly determined by dividing watts by line volts; for example, a 100 watt soldering iron at 115 volts draws 100 divided by 115 or .87 amp. approximately.

Check the arc of rotation of the line current pointer. It should stop exactly at the last line at the high-current end of the travel. If it does not do so, it should be so adjusted.

Set the pointer to indicate the current being drawn by the load, whether radio set, lamps, soldering iron, or what not. The value of current either being measured on an AC ammeter or calculated as described above.

Adjust the line current calibrating control at the bottom and rear of the chassis until the tuning indicator shadow just closes.

The audio channel requires no calibration or adjustment.

# COMPLETE INSTRUCTIONS FOR OPERATION OF THE

# SIGNAL CALIBRATOR

*"This calibrator is presented in this manual only as a general guide in the construction of Amateur Gear. The essential parts which are available from Thordason-Meissner are marked * on the diagram."*

The rules of the F. C. C. provide that the licensee of an amateur station shall provide for measurement of the transmitter frequency and establish procedure for checking it regularly. The measurement—"shall be made by means independent of the frequency control of the transmitter and shall be of sufficient accuracy to assure operation within the frequency band used."

Since it is known that most receiver calibrations cannot be relied upon with sufficient accuracy to satisfy the Commission requirements, and since most operators are not content to work well within the band, but prefer rather to work close to the edge of the band, a device of high accuracy is required to satisfy both the amateur's desire to be near the edge and the Commission's requirement that operation be confined within the frequency band used. The Meissner **Signal Calibrator** is a device that answers not only the requirement of marking the edges of the main amateur bands accurately, but marks also the edges of the phone sub-bands and provides markers every 10 kc so that interpolation may be used with confidence to find the frequency of any station within the band, since the frequency markers are spaced at sufficiently close intervals to virtually eliminate the curvature of the tuning curve as a contributing factor to errors in frequency measurement. Only one amateur band edge is not accurately marked, the low frequency edge of the 160 meter band, but markers are provided at a separation of only 5 kc above and below this edge (1715 kc) so that even this band edge can be determined with a high degree of precision.

The frequency standard is a silver-plated quartz bar clamped between knife edges. This rather expensive construction is used in preference to the more conventional pressure type or air-gap type of crystal holder in order to avoid frequency modulation of the crystal due to the vibration of the chassis as the various switch buttons are operated. An air-dielectric condenser is connected across the crystal to permit the frequency of oscillation to be shifted over a range of about 15 cycles either side of exactly 100 kilocycles.

The 50-kc series of harmonics is obtained from a multivibrator controlled by the 100-kc bar. Its frequency is exactly one-half of the crystal frequency, and therefore it has the same percentage accuracy of calibration as the crystal.

The 10-kc series of harmonics is obtained from a second multivibrator circuit, controlled by the 50-kc multivibrator, which generates a series of harmonics at 10-kc intervals, all as accurate in frequency as the 100-kc crystal.

An amplifier, consisting of two stages of 1852 television amplifier tubes, is used for the purpose of providing strong harmonics of 10 kilocycles up to at least 30 megacycles and as a means of introducing modulation without disturbing the multivibrators or causing frequency modulation of the crystal.

Modulation is accomplished by placing a 60-cycle AC voltage on the suppressor grid of one of the amplifier tubes.

Controls are provided to regulate the gain of the output amplifier and the amount of modulation.

A push-button switch has been provided to conveniently change from one series of harmonics to another merely by pressing the desired button. No damage can result if two or more buttons are pressed simultaneously.

The **Signal Calibrator** is tested and sold with a proper set of tubes in place. It is recommended that at least the multivibrator (6N7G) tubes be left in their proper sockets. If the tubes are interchanged, the multivibrator may require readjusting since they are used in a manner not covered by the usual production inspection of tubes. More variation may be expected of tubes in the multivibrator circuit than in normal amplifier service. Complete instructions are given, however, for adjusting the device should it get out of adjustment accidentally or require replacement of tubes.

The tube complement is as follows: 6K8 crystal oscillator, 6SK7 buffer amplifier, 6N7G 50-kc multivibrator, 6N7G 10-kc multivibrator, 2-1852 output amplifiers, 6X5G rectifier.

## ACCURACY

The Meissner **Signal Calibrator** is capable of extreme accuracy if properly adjusted and if used at the proper temperature. The oscillator circuit used with the crystal is one that is practically independent of line-voltage fluctuations; therefore, the characteristics of the crystal itself largely determine the stability of the unit.

Since the crystal has a small temperature characteristic, the equipment should be used at as near constant temperature as possible, or it should be calibrated under the temperature of use if the equipment must be used under extremes of heat and cold. Ample ventilation makes the actual shift in frequency during the warm-up period very small and the warm-up period short. For a high degree of accuracy it is recommended that the warm-up period be at least ½ hour.

The ultimate accuracy depends upon the accuracy with which the **Signal Calibrator** is set to zero beat with a good standard of frequency. Visual methods of checking the beat note are recommended because such methods are sensitive to differences of a fraction of a cycle per second whereas audible methods of comparison are usually not sensitive to closer than 10 cycles or more, depending upon conditions and upon the hearing of the operator.

## FREQUENCY STANDARDS

Since any highly precise standard of frequency must be adjusted under actual service conditions if maximum accuracy is to be obtained, the **Signal Calibrator** should be adjusted after being placed in operation.

There are numerous standards against which it may be adjusted, the most common of which is a broadcasting station. With the 10-kc series of harmonics from the **Signal Calibrator** available, it is possible to use any American broadcasting station as a frequency standard since all of them operate, at the present time, on frequencies that are integral multiples of 10 kilocycles.

With this wide choice of stations there naturally comes the question of which stations are the best to use as frequency standards. It seems a safe rule to assume that the highest-powered stations have the best equipment and consequently maintain the greatest accuracy of frequency, but this is only an assumption that should be verified before being used. Actually the best standard of frequency against which to adjust the **Signal Calibrator** is the Standard Frequency Service broadcast frequently (almost daily) by the Bureau of Standards Station WWV at Washington, D. C. This station has a schedule of transmissions on various frequencies so that the user of a **Signal Calibrator** should be able to pick up at least one, if not several of the standard frequencies broadcast regardless of his location. The schedule of transmission may be checked against the published data on WWV in QST Magazine.

## THE CIRCUIT

The circuit of the **Signal Calibrator** is shown in Fig. 1. In this diagram the various parts of the circuit are segregated to facilitate understanding it.

The oscillator, shown on the left side of Fig. 1, is extremely stable against frequency variations induced by line-voltage changes or against

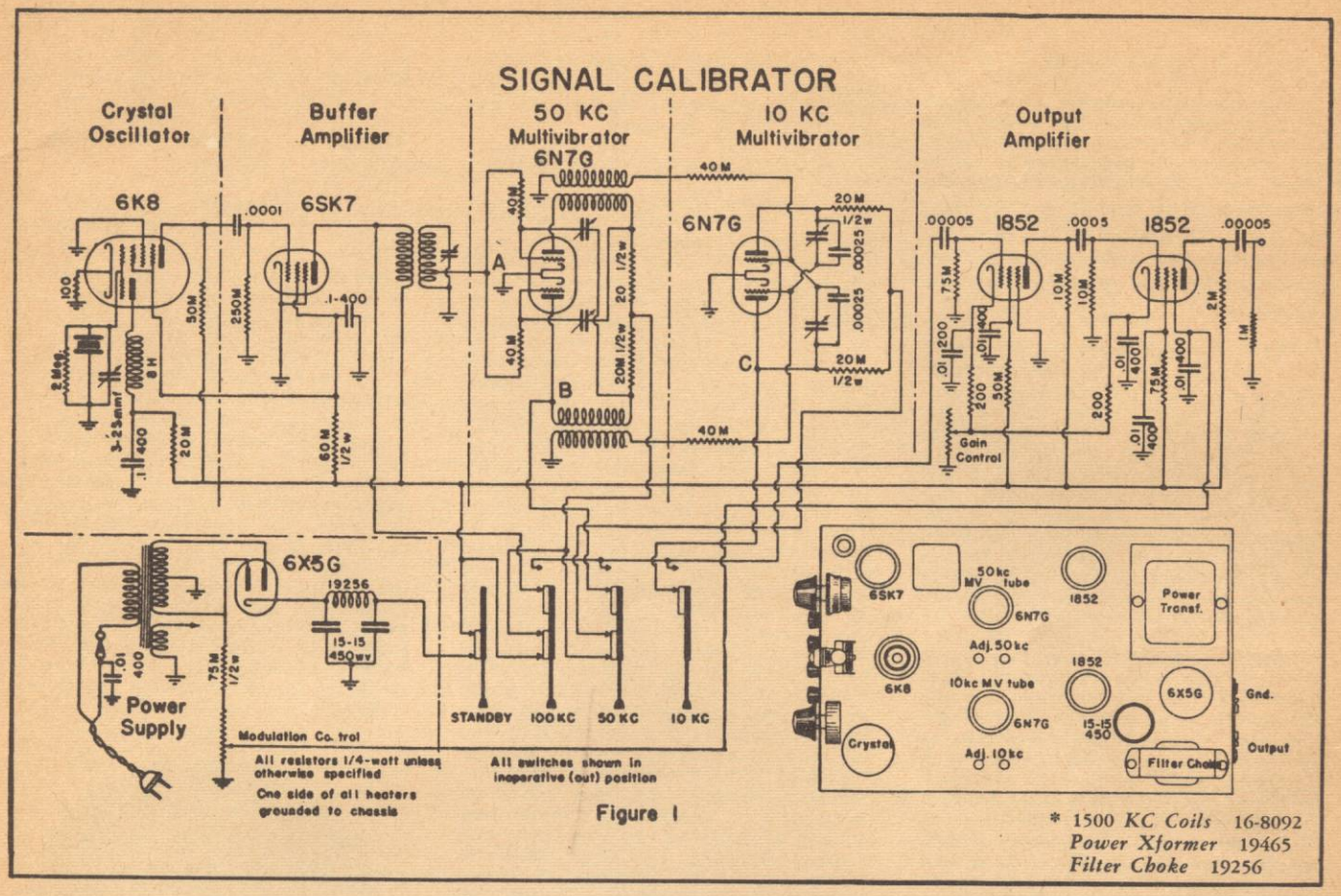


Figure 1

changes caused by the reaction of circuits following the oscillator. Its principle uncontrolled variation is caused by temperature changes influencing the crystal itself. Its only controlled change in frequency is effected by shifting the capacity of a small air-dielectric condenser that is connected in parallel with the crystal for that purpose.

The buffer amplifier, shown next to the oscillator portion of the circuit serves the purpose of providing satisfactory selection of the 100-kc fundamental and suppression of the undesired harmonics so that the following multivibrator circuit may have a wave of good shape to control its frequency. Setting the adjustments in their mid-point gives reliable stable operation.

The circuit of the 50-kc multivibrator is shown in Figure 1 next to the buffer amplifier. Examination of the circuit will show it to be of conventional type. The frequency adjustment is made by varying the capacity of the coupling condensers. The control voltage is injected in series with the low end of both grid leaks.

The fundamental circuit of the 10-kc multivibrator is similar to that of the 50-kc. The unusual feature of both multivibrators is the method of coupling them together. A mutual inductance in series with the plate circuit of the 50-kc multivibrator and the grid circuit of the 10-kc multivibrator delivers to the grid circuit of the 10-kc multivibrator a sharp pulse at the beginning of each plate current cycle. It is these sharp pulses, applied to the grid circuits of the 10-kc multivibrator, that maintain synchronism over a wider range of adjustment of coupling condensers in the 10-kc circuit than could be obtained without such aid. 10-kc stability is therefore maintained to the extent that no normal line-voltage fluctuation will disturb the frequency of the 10-kc multivibrator and that portion of the instrument may be started and stopped at will with the assurance that it will always pull into its proper operating frequency when turned on.

The output amplifiers are high mutual-conductance television tubes in an aperiodic circuit which has been designed to suppress the low frequencies to some extent since they are naturally the strongest harmonics and do not require much amplification.

### AUDIO MODULATION

Audio modulation is available on all frequencies without any trace of frequency modulation because it is introduced after the signals have passed through adequate isolation in the form of buffer amplifier stages.

The modulating frequency is 60 cycles because this frequency is available without the use of the extra tube that would be required to generate any other frequency.

Because of the fact that the modulating tube is also used as a variable-gain amplifier, the modulating characteristics of the tube are not constant but vary with the setting of the output control. As the output is increased, the modulating efficiency is reduced and the percentage modulation on the signal is lowered. As the output is reduced, therefore, the percentage of modulation increases. Under some conditions, the signals are over-modulated and sound quite ragged, but the Modulation control can always be retarded until the desired degree of modulation is obtained.

If the modulator tube is operated at fixed bias, so as to maintain constant modulating efficiency, the output variation possible with control voltage on only one tube is insufficient.

The fact that the modulating voltage is introduced into the output amplifier, together with the fact that there naturally is some radiation directly from the oscillator and from the multivibrators, means that, especially at the low frequencies, the output may be fairly large before modulation is possible. It is obvious that there must be output from the amplifier over and above the direct signal radiated from the oscillator or multivibrators before modulation is possible. This phenomenon drops off rapidly with increases in frequency and usually is not of any consequence in the Amateur Bands.

## CALIBRATION

The **Signal Calibrator** is adjusted at the factory to have the appropriate harmonic at zero beat with the Standard Frequency transmission from WWV but it can be expected that this adjustment may change slightly during shipment and handling. It is desirable therefore to check the calibration when first set up and at intervals thereafter.

The **Signal Calibrator** has been built in accordance with the best engineering practice short of temperature control on the crystal which was avoided because of expense. The slight temperature coefficient should therefore be recognized when considering extremely accurate measurements. **The responsibility for the accuracy of the Signal Calibrator rests with the user. He must adjust it and check its accuracy from time to time, the intervals between checks being governed by the accuracy demanded.**

The first step in calibrating is to choose a standard of frequency. Having made the choice, tune in the signal on any receiver sufficiently sensitive. It is highly desirable to use a receiver with some kind of a tuning indicator so that a true zero-beat may be obtained. Very few receivers will reproduce as low as thirty cycles and still fewer people can hear this frequency which is still an appreciable difference from zero-beat particularly if the comparison is made at a relatively low frequency, since the error in zero-beat setting is multiplied in proportion to the ratio of the desired high-frequency point divided by the frequency on which standardization is being accomplished. In other words—if the admitted zero-beat error is thirty cycles at 700 kilocycles the error at 28 megacycles is 1200 cycles.

In the event that a tuning indicator is not available or cannot be connected to the receiver, a person with keen hearing can check zero-beat by the rise and fall in signal strength as the voltage from the **Signal Calibrator** alternately aids and opposes the voltage picked up from the station chosen as the frequency standard. It will be necessary to adjust the output of the **Signal Calibrator,** or the degree of coupling between the receiver, and the calibrator or the antenna, in order to get the best beat note effect. If at all possible, the visible method of zero-beat determination is preferred above the aural method because inherently greater accuracy is possible.

Having found the proper method of getting a satisfactory beat note, the 100-kc adjustment on the front panel is adjusted for zero-beat after an appropriate warm-up period. A minimum of ½ hour is recommended for high accuracy. If there are drastic changes in room temperature or sudden drafts across the **Calibrator** a few cycles shift in frequency can be expected in the amateur bands, becoming progressively less as the frequency selected is lower.

## ADJUSTING MULTIVIBRATORS

A frequency-dividing multivibrator is one whose natural uncontrolled cycle is longer than the desired controlled interval, and which cycle is shortened by the application of the controlling voltage. The first step in adjusting a multivibrator is therefore to remove the controlling voltage. If the 50-kc multivibrator is to be adjusted, the crystal controlled voltage is removed which is most easily accomplished by removing the crystal. Should a receiver be available that will cover the range 50-kc to 100-kc the output frequency of the uncontrolled multivibrator can be checked directly with the receiver. If only a Broadcast and Short-Wave receiver is available, the harmonics of the uncontrolled multivibrator are picked up on the receiver on its lowest frequency range so that the greatest dial separation is obtained between harmonics. If the frequencies of a number of harmonics are determined by the calibrations on the dial, the base (uncontrolled natural) frequency of the multivibrator can be determined by the average of the differences between adjacent pairs of harmonics. Actually the base frequency is equal to the frequency difference between any two adjacent harmonics but the average is recommended to compensate as much as possible for the **receiver calibration errors.** The trimmers on the 50-kc multivibrator should be adjusted (approximately in equal amounts) until the base frequency is somewhere in the neighborhood of 40 kilocycles. If the crystal is now installed the multivibrator will be pulled into a 2 to 1 frequency ratio with the controlling voltage and will consequently work at 50 kc.

The 10-kc multivibrator is adjusted in a similar manner, removing the 50-kc multivibrator tube and the crystal so that there can be no voltage to influence the natural uncontrolled period. The multivibrator is adjusted to have a frequency slightly lower than 10 kilocycles and when the 50-kc multivibrator tube and the crystal are installed the 10-kc multivibrator should operate at 10-kc controlled by the pulses from the 50-kc source. Because of the fact that the 10-kc multivibrator is operating at considerably greater frequency-division ratio than the 50-kc multivibrator, 5 to 1, instead of 2 to 1, the range of adjustment giving satisfactory operation is more limited in the 10-kc circuit than in the 50-kc circuit, and accordingly the 10kc multivibrator may not pull into proper relation without slight readjustments of the low-frequency coupling condensers. The proper adjustment is obtained when there are four carriers **between** adjacent 50-kc harmonics. The 50-kc markers can easily be located near the low end of the receiver being used for calibrating and checking, and the number of carriers counted between these points when the 10-kc series of harmonics is turned on.

If a cathode-ray oscillograph is available the fastest method of adjusting the multivibrator coupling condensers is to use Lissajous figures on the cathode ray tubes when one set of deflection plates is connected to the 100-kc source and the other is connected to the 50-kc circuit while adjusting the 50-kc coupling condensers, and then connecting the oscillograph to the 50- and to the 10-kc circuits while the coupling condensers of the latter circuit are adjusted. In the complete circuit diagram the suggested points for attaching the cathode-ray oscillograph are shown. The connections from the cathode-ray input amplifiers to the circuits in the **Signal Calibrator** should be made through small condensers located close to the **Calibrator.** These condensers should have a capacity between 10 and 25 mmfd. so as not to disturb the circuits unduly.

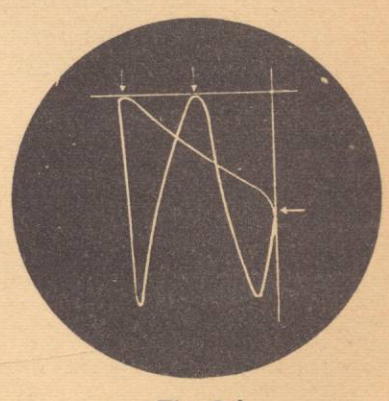

**Fig. 2-A**

**50-kc ADJUSTMENT**

Horizontal plates to "A" and chassis.
Vertical plates to "B" and chassis.

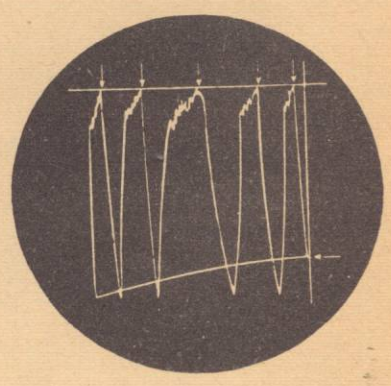

**Fig. 2-B**

**10-kc ADJUSTMENT**

Horizontal plates to "B" and chassis.
Vertical plates to "C" and chassis.

Fig. 2 shows a representative picture of the Lissajous figures for the 100- to 50-kc division and for the 50- to 10-kc division. The frequency ratio is read from the figure by counting the number of places where the figure becomes tangent or touches a pair of lines drawn at right angles to each other and acting, so to speak, as two adjacent sides of a frame for the figure. In Fig. 2-A the ratio is 2 to 1 and in Fig. 2-B, the ratio is 5 to 1. The imaginary "half frame," and the points of tangency are marked on the diagrams.

### USES AND OPERATING INSTRUCTIONS

The uses for the **Signal Calibrator** are numerous and will occur in increasing number as greater use is made of the instrument. In Amateur Radio stations its principal purposes are to accurately measure the frequency of transmitters, to measure the frequency of received signals, and to mark the edges of the bands beyond which the Amateur may not go, and to pre-set receivers or transmitters to definite frequencies in order to facilitate keeping schedules with other stations. Suggested methods of accomplishing these results are given below. In addition to these functions, however, other uses for the equipment will be obvious to the user.

### CHECKING TRANSMITTER FREQUENCY

To check the transmitter frequency it is necessary to have either a receiver that is well enough designed and shielded that it will not block and become inoperative when the transmitter is turned on, or a well-shielded heterodyne monitor. If the monitor has a fundamental frequency at the frequency of the transmitter, there is less chance for error and the results are easier to interpret than if a monitor harmonic beats with the transmitter signal. The method of use is to inject enough signal from the **Signal Calibrator** into the monitor to locate on the monitor the 100-kc harmonic next above and next below the transmitting frequency. The 50- or the 10-kc signals are then turned on, whichever serves the purpose better, and the transmitter frequency bracketed between two known markers 10-kc apart. The deviation of the carrier from one or the other marker is easily estimated by interpolation.

### CHECKING FREQUENCY OF RECEIVED SIGNALS

The method of checking the frequency of a received signal is essentially the same as outlined above for transmitters except that a receiver is used for reception of a distant signal in place of a monitor being used to pick up a local signal.

### CHECKING BAND EDGES

The **Signal Calibrator** is an excellent device to spot the edges of either CW or Phone bands. It may be coupled to the receiver and set at such a level that the markers at the band edges are just audible and operate continuously. The level of the markers may be changed instantly to make them strong enough to be picked out of the strongest interference or to be just as quickly eliminated so that a weak signal on the band edge can be read.

### CHECKING E. C. O.'s

The amateur who has a good electron-coupled oscillator naturally desires to use it for operation close to the band edges if he has confidence in its calibration, or if he has any way of checking its frequency to be sure that the signal is still within the specified band. A convenient method of obtaining this assurance is to use the **Signal Calibrator** to mark the band edges in a receiver and to listen to the frequency of the E. C. O. in the receiver with the transmitter itself turned off. In this way the frequency of the E. C. O. can be checked with certainty before the signal goes on the air and the operator can therefore be sure that he is within the legal limits of frequency. Naturally the closer he chooses to work to the edge of the band, the more frequently he must check his E. C. O. but with the convenience of the **Signal Calibrator** only a moment is consumed in this checkup.

In the operation of phone transmitters it is to be remembered that the law requires **all of the sidebands** of an amateur phone to lie within the specified band. It is obvious then, that the carrier must be at least as far away from the edge of the band as the highest audio frequency transmitted. When working particularly close to the edge of a band, a low-pass filter in the audio system is recommended to cut off all frequencies above 2000 cycles in order to restrict the width of the side bands, and since most receivers are used in a highly selective condition when listening to amateur phone signals the loss of frequencies above 2000 cycles will not be noticed on long distance transmission.

### LOCATING SIGNALS FOR SCHEDULES

In the crowded condition of the amateur bands it is a great convenience to be able to locate a given frequency in the band just prior to a schedule and to have both the receiver and transmitter within a few cycles of the specified frequency.

To set the receiver, the 100-kc series of harmonics is turned on and the receiver tuned to the harmonic nearest to the desired frequency. The 10-kc series is then turned on and the receiver is tuned toward the specified frequency counting the 10-kc markers that are passed until the desired frequency is bracketed between two known 10-kc harmonics. The exact frequency can then be located very closely by interpolation.

With the receiver set as specified above, an electron-coupled exciter may easily be tuned to the receiver frequency making it possible to start exactly on frequency with no time lost in looking for the operator with whom the schedule was set up.

### 5-KC BEAT

Many receivers pass a band wide enough that when the receiver (with beat-frequency oscillator working) is tuned midway between two 10-kc markers, there will be a 5-kc beat note with each of the 10-kc harmonics and a secondary zero-beat will be heard between the two 5-kc audio notes. When this zero-beat is obtained another calibration spot is available midway between two 10-kc harmonics, and known with just as great accuracy as the 10-kc series. or the 100-kc fundamental. The all-important thing is to be sure that no beats have been missed or spurious outside signals counted in determining an unknown frequency. As a check it is wise to count over to where the next 50- or 100-kc marker should be and then turn off the 10-kc markers to see if the receiver is still tuned to a marker from the **Signal Calibrator.** If the count has been correct a 50- or 100-kc marker should remain in tune when the 10-kc markers are shut off.

The most frequently noticed spurious responses are the images of harmonics of the **Signal Calibrator.** These images may be very close to a desired signal since a harmonic differing by approximately twice the intermediate frequency from the desired signal may be emitted by the **Signal Calibrator** simultaneously with the desired signal. To avoid apparently strong images, it is desirable to operate the **Signal Calibrator** at the lowest convenient level so that the AVC in the receiver will not tend to equalize the signal and the image.

Extreme care has been taken to make the stability of the crystal circuit enough so that there would be no audible shift in frequency at 28 megacycles when switching from one series of harmonics to another. In some receivers there will appear to be a difference due to the difference in signal strength between one series of harmonics and another changing the receiver oscillator slightly. If the output control of the **Signal Calibrator** is adjusted so that each series of harmonics gives the same reading on the "R" meter of the receiver, the beat note will be found to be practically identical.

# THORDARSON

## HIGH FIDELITY 10 WATT PHONO-TUNER AMPLIFIER

*This amplifier is presented in this manual only as a general guide in the construction of amplifiers. The power and output transformers and the filter choke are available.*

This high fidelity amplifier has been designed for home music installations or other applications where quality reproduction is required. In addition to accommodating AM-FM tuner or crystal pickup signal sources, this amplifier includes a 6SC7 pre-amplifier. This stage provides the additional voltage amplification and bass equalization required for operation with a magnetic reluctance phono cartridge. By means of a slight modification (see diagram) the equalization can be removed so that this stage can function as a conventional pre-amplifier where a microphone signal source is desired. The output of the pre-amplifier has been brought to a terminal board on the rear apron of the amplifier chassis (lugs 1 & 3) so that the various signal sources such as tuner, crystal pickup, magnetic pickup, or microphone can be readily selected, by means of a simple switching arrangement and applied to the medium level input (lugs 2 & 3). If the amplifier is to be used only for crystal pickup or tuner applications, this pre-amplifier stage can be omitted when constructing the unit.

The control panel contains a volume control and two tone controls which are treble and bass. The tone control action provided is produced by means of an inverse feedback circuit. The frequency response of the amplifier is linear when the treble control is set at zero or the center of the dial, and the bass control set at the 1 position. The treble frequencies are boosted when the treble control is turned to ward the left. Likewise, attenuation occurs when this control is turned toward the right position. The bass frequencies are boosted when the control is turned toward the right position. These controls are effective for correcting reproduction due to differences in pickups, records, speakers, or acoustical conditions. An AC line switch is located on the bass control shaft.

A high grade speaker of at least 10 watts rating is recommended if one is desirous of making use of the excellent characteristics of this amplifier. Best results will be obtained with the dual types incorporating separate speakers for the high and low registers. Speaker systems of this type are capable of converting electrical energy into sound with good efficiency at all frequencies from 30 to 10,000 cycles. There are, however, single speaker units available with effective enclosures that will reproduce all frequencies from 60 to 8,000 cycles. Although these units are less espensive than the dual types, excellent results can be obtained. The speaker voice coil connections are made to the terminal board located on the rear apron of the amplifier. Correct impedance matching is important for good quality reproduction. The speaker impedance taps provided on this unit will match the majority of the high fidelity speakers on the market today. There are, however, several dual speaker units whose impedance rating is 500 to 600 ohms. To properly match such a speaker to this amplifier, employ a Thordarson T-22S80 500 ohm line to voice coil transformer.

### TECHNICAL DATA

Power Output: 10 watts or 32,2 db (less than 3% distortion).
Input Circuits: One high impedance input for AM-FM tuner or crystal phono pickup. One optional high impedance pre-amplifier input for magnetic reluctance pickup or high impedance microphone.
Output Impedances: 4, 8, 16 ohm.
Frequency Response: ± 1 db from 20 to 20,000 cps measured through phono-tuner channel. Equalized pre-amp has a fixed bass boost of plus 15 db at 100 cps.
Tone Controls: One bass control providing a maximum bass boost of plus 8 db at 100 cps. One dual treble control providing a maximum treble boost of plus 10 db at 10,000 cps or a maximum treble attenuation of - 20 db at 10,000 cps.
Gain: Phono-tuner channel, 69 db; pre-amplifier stage, 113 db; measured at 1000 cps.
Hum Level: 70 db below rated output.
Tube Complement: 1 6SC7; 1 6SL7GT; 2 6V6GT; 1 5Y3GT.
Power Consumption: 70 watts, 110-120 volts, 60 cy.
Chassis Size: 7 X 12 X 3", Bud # 792 or equivalent.

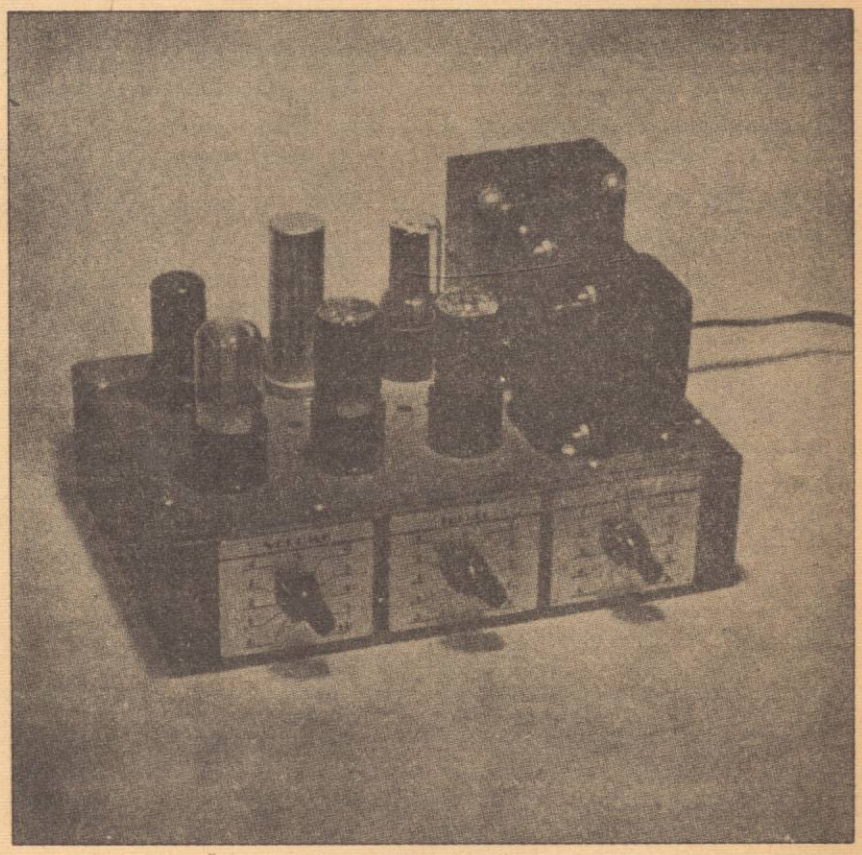

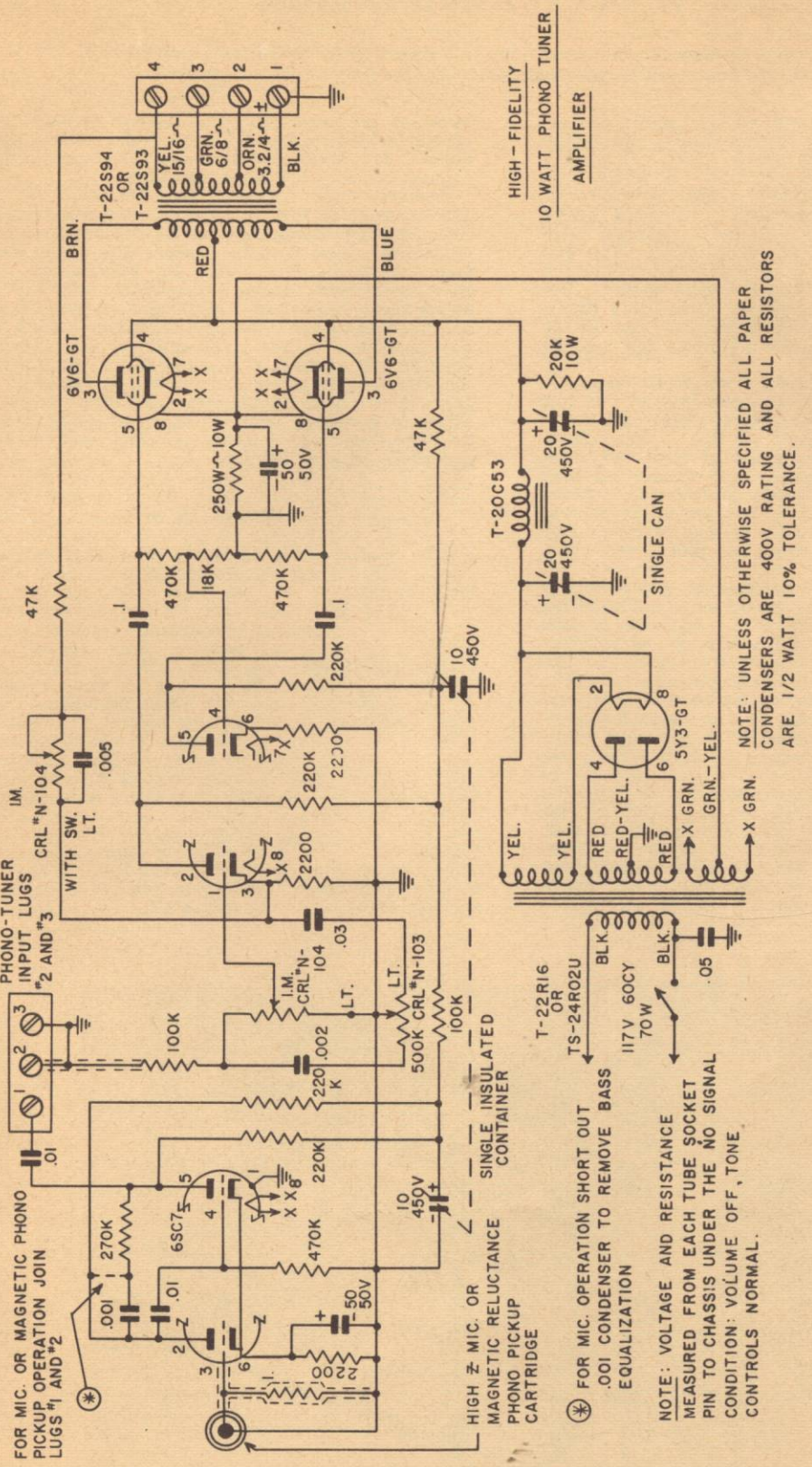


VOLTAGE READINGS WERE TAKEN WITH AN RCA VOLT-OHMYST 195. TO DUPLICATE THESE READINGS A METER HAVING AN EQUIVALENT HIGH RESISTANCE MUST BE USED. PRE-AMP STAGE CONNECTED FOR MIC. OPERATION. *HEATERS ARE ABOVE GROUND BY +17 V.D.C.

TUBE SOCKET PIN NUMBERS

| TUBE TYPE | 1 | | 2 | | 3 | | 4 | | 5 | | 6 | | 7 | | 8 | |
|---|---|---|---|---|---|---|---|---|---|---|---|---|---|---|---|---|
| | VOLTS | OHMS | VOLTS | OHMS | VOLTS | OHMS | VOLTS | OHMS | VOLTS | OHMS | VOLTS | OHMS | VOLTS | OHMS | VOLTS | OHMS |
| 6SC7 PRE-AMP | 0 | 0 | 105 | 317K | 0 | 1MEG | 0 | 470K | 105 | 317K | 1.3 | 2200 | 3.15AC* | 250 | 3.15AC* | 250 |
| 6SL7-GT INVT. | 0 | 0 | 120 | 287K | 1.4 | 2200 | 0 | 18K | 120 | 287K | 1.4 | 2200 | 3.15AC* | 250 | 3.15AC* | 250 |
| 6V6-GT OUTPUT | 0 | 0 | 3.15AC* | 250 | 300 | 20K | 305 | 20K | 0 | 470K | — | — | 3.15AC* | 250 | 17 | 250 |
| 5Y3-GT RECT. | — | — | +335 | 20.4K | — | — | 350 | 210 | — | — | 350 | 210 | — | — | +335 | 20.4K |

# THORDARSON

## 25 WATT AMPLIFIER

*This amplifier is presented in this manual only as a general guide in the construction of amplifiers. The power and output transformers and the filter choke are available.*

This 25 watt amplifier is a general purpose public address amplifier having excellent fidelity characteristics. The output tubes are operated in Class $AB_2$ under which condition a small amount of driving power is required. A single 6N7, plates and grids paralleled, supplies sufficient excitation through the T-20D79 driver transformer. The 6L6 output tubes are operated within the manufacturer's maximum electrode ratings to insure long trouble-free operation. The 6L6 screen voltage is obtained from a divider network and the grid bias is obtained from a semi-fixed voltage source. Degeneration or inverse feedback is applied across this amplifier from the secondary of the output transformer back to the cathode of the mixer stage to reduce distortion and improve the frequency response.

The input circuits will accommodate two high impedance microphones and an AM-FM tuner or phono pickup. If low impedance microphone operation is required, include a T-1A50 or T-1A70 line to grid transformer. Mixing of the signal sources takes place in the second stage by means of a resistor network which is more simple and economical than electronic mixing. The control action is smooth, and the changing of one control setting does not affect the others. It is important, however, to shield the mixing resistors and the leads shown in the diagram to avoid hum pickup and cross talk.

The frequency response can be adjusted by means of the two tone controls; one for bass and the other for treble. With the tone controls in normal position, the response is flat from 30 to 15,000 cycles. There is a 5 db response accentuation at 100 cps, which has purposely been included by making the inverse feedback circuit frequency selective. This boost of the bass frequencies is desirable for tuner and record reproduction but can, however, be eliminated for voice work by means of the bass tone control. The bass and treble tone controls are effective in eliminating feedback when bad acoustical conditions exist.

To insure good quality reproduction, several PM speakers having a diameter of at least 12 inches are recommended. The units should be capable of efficiently handling 15 watts of audio power each, if the full 25 watt output of the amplifier is to be utilized. In most cases two speakers are preferred so that the proper distribution of the sound will occur. Audio feedback to the microphone is usually reduced when two speakers are used, since the volume of each speakers is considerably less than would be necessary with a single speaker. School and hotel installations, of course, require a great a great number of smaller speakers.

Speaker voice coil or line connections to the amplifier can be made to the two speaker connector receptacles. The rotary switch determines the impedance available at the receptacles. Turn it to the number which indicates the impedance required. When using the receptacles, voice coil or line connections are made to contacts 5/6/7 or 8 and ground connections to 1-2-3 or 4 as illustrated in the drawing. Where one speaker is used, turn the impedance switch to the number corresponding to the voice coil or line impedance of the speaker. If a speaker is connected to each receptacle, turn the switch to the number having half the value of each speaker impedance. This is necessary because the receptacles are wired in parallel. For instance, with two 8 ohm speakers turn the switch to 4 ohms. Correct impedance matching is important for good quality.

### TECHNICAL DATA

| | |
|---|---|
| Power Output: | 25 watts or + 36.2 db (less than 5% distortion). |
| Input Circuits: | Two high impedance microphone channels, (or two optional low impedance microphone inputs). One high impedance phono channel. |
| Output Impedances: | 4, 8, 15, 125, 250, 500 ohms. |
| Frequence Response: | Within ± 1 db from 30 to 15,000 cps with a 5 db bass boost at 100 cps. |
| Tone Controls: | One bass control, maximum position attenuates 50 cps 20 db. |
| | One treble control. Maximum position attenuates 10,000 cps 15 db. |
| Gain: | High impedance microphone input, 114 db |
| | Phono input, 72 db |
| Hum Level: | 65 db below rated output. |
| Tube Complement: | 2 6J7; 1 6SJ7; 1 6N7; 2 6L6; 1 5U4G. |
| Power Consumption: | 137 watts, 110-120 volts, 60 cy. |
| Chassis Size: | 14 X 10 X 3". |

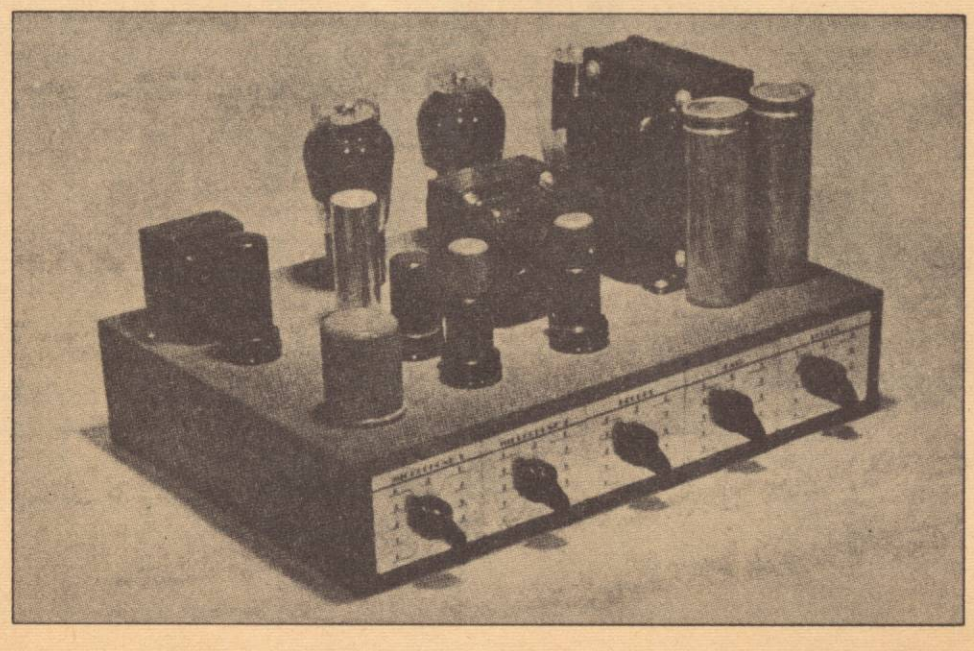

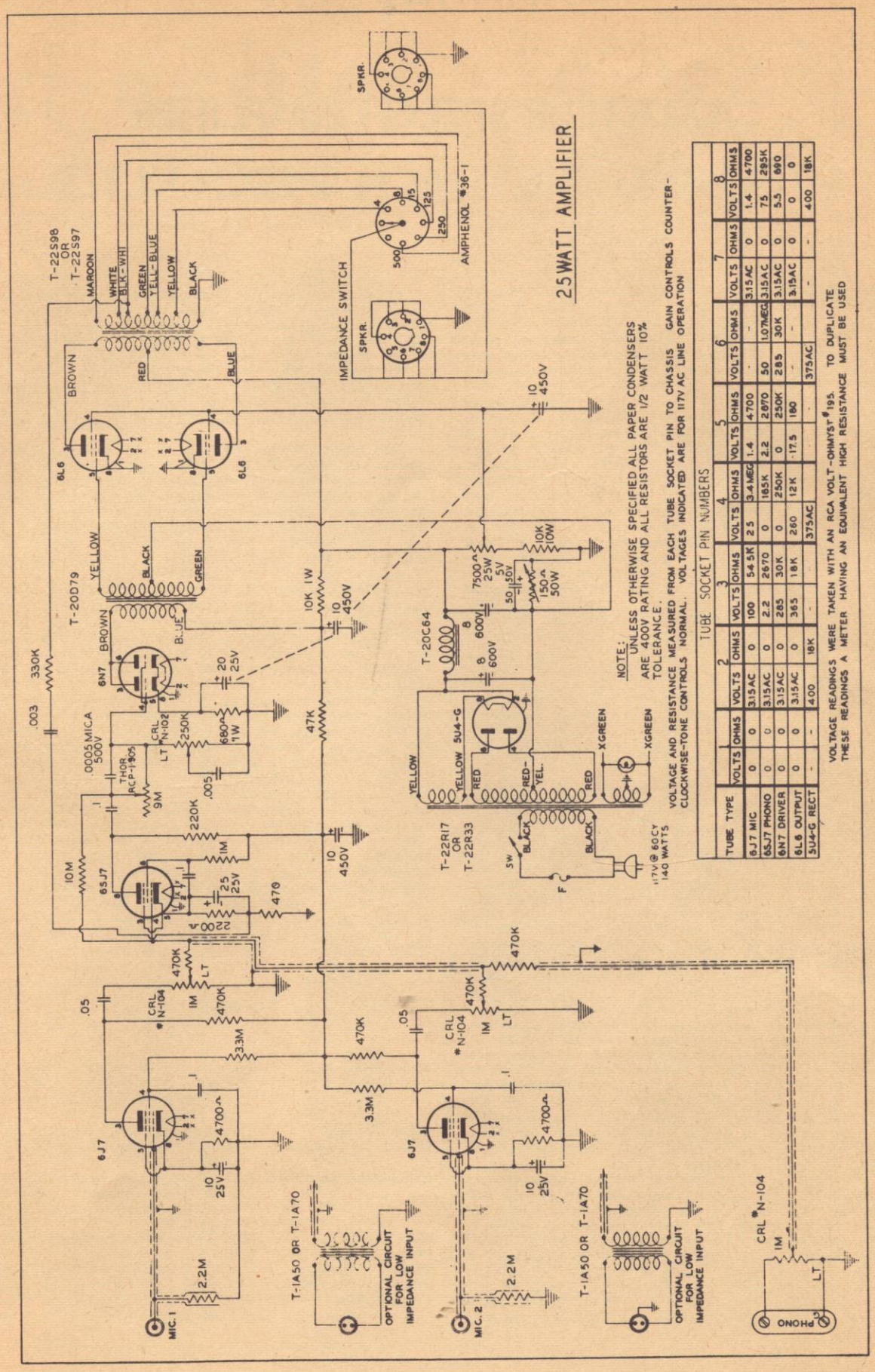


NOTE: UNLESS OTHERWISE SPECIFIED ALL PAPER CONDENSERS ARE 400V RATING AND ALL RESISTORS ARE 1/2 WATT 10% TOLERANCE.

VOLTAGE AND RESISTANCE MEASURED FROM EACH TUBE SOCKET PIN TO CHASSIS GAIN CONTROLS COUNTER-CLOCKWISE-TONE CONTROLS NORMAL. VOLTAGES INDICATED ARE FOR 117V AC LINE OPERATION

TUBE SOCKET PIN NUMBERS

| TUBE TYPE | 1 | | 2 | | 3 | | 4 | | 5 | | 6 | | 7 | | 8 | |
|---|---|---|---|---|---|---|---|---|---|---|---|---|---|---|---|---|
| | VOLTS | OHMS | VOLTS | OHMS | VOLTS | OHMS | VOLTS | OHMS | VOLTS | OHMS | VOLTS | OHMS | VOLTS | OHMS | VOLTS | OHMS |
| 6J7 MIC | 0 | 0 | 3.15AC | 0 | 100 | 54.5K | 25 | 3.4 MEG | 1.4 | 4700 | - | - | 3.15AC | 0 | 1.4 | 4700 |
| 6SJ7 PHONO | 0 | 0 | 3.15AC | 0 | 2.2 | 2670 | 0 | 165K | 2.2 | 2670 | 50 | 1.07MEG | 3.15AC | 0 | 75 | 295K |
| 6N7 DRIVER | 0 | 0 | 3.15AC | 0 | 285 | 30K | 0 | 250K | 0 | 250K | 285 | 30K | 3.15AC | 0 | 5.5 | 690 |
| 6L6 OUTPUT | 0 | 0 | 3.15AC | 0 | 365 | 18K | 260 | 12K | 17.5 | 180 | - | - | 3.15AC | 0 | 0 | 0 |
| 5U4-G RECT | - | - | 400 | 18K | - | - | 375AC | - | - | - | 375AC | - | - | - | 400 | 18K |

VOLTAGE READINGS WERE TAKEN WITH AN RCA VOLT-OHMYST #195. TO DUPLICATE THESE READINGS A METER HAVING AN EQUIVALENT HIGH RESISTANCE MUST BE USED

# THORDARSON

## AMATEUR SPEECH AMPLIFIER UTILIZING THE T-20C73 SPEECH FILTER

The circuit diagram illustrates the application of the Thordar-T-20C73 Speech Filter in a typical amateur speech amplifier and driver unit. This compact audio band pass filter has been specifically designed for amateur, police, and emergency radio service. It provides several worthwhile operating advantages when installed in the speech section of transmitters employed for voice communication.

The main requisite for communication work is signal readabiliyt and intelligibility, not "broadcast quality". Extensive tests have proven that adequate speech transmission can be obtained with no noticeable reduction in articulation by employing an audio band of approximately 200 to 3500 cycles. This band pass range has been employed in the Thordarson T-20C73 filter. The advantages gained by utilizing this bandwidth restriction are two-fold: First, the attenuation of all frequencies below 200 cycles permits an increase in the modulation level of those frequencies which contribute the most to signal readability. In explanation, the audio frequencies lying below 200 cycles contain a large share of the speech energy and, therefore, are the first to cause over-modulation. However, as these frequencies contain only a small percentage of the signal intelligibility, they can be readily eliminated so as to confine the modulating power to the middle register which contributes the most to signal intelligibility. The suppression of a voice frequency above 3500 cycles results in little reduction in articulation. The advantage gained by this action is that it limits the number of high frequency side bands transmitted, causing the phone signal to occupy less spectrum space. This results in a reduction in adjacent channel interference and will aid materially in producing additional room for stations in the congested amateur phone bands.

The filter also provides the added advantage of suppressing the effects of hum pickup which often occurs in the low level speech amplifier stages. This same unit may also be advantageously inserted in the audio amplifier circuit of communications receivers. Tests have shown that the amount of interference noise passed by a receiver is proportional to its audio band width. By employing this speech filter to limit the audio response range, high pitched heterodynes and other extraneous signals will be suppressed.

Electrically this unit has been designed to work from a source impedance of approximately 10,000 ohms as afforded by medium Mu triodes (6C5, 6J5, ½6SN7, or triode connected 6J7) to a 100,000 ohm grid circuit or to a 500 ohm line. When employing the 100,000 ohm output tap, a 1 to 3.15 voltage stepup will be realized through the filter. The 500 ohm line tap is provided for connecting to a low impedance line when the low level speech amplifier section is located on the operating desk or at a point remote from the driver and modulator sections. The 20C73 Speech Filter will function satisfactorily at any signal level up to approximately 8 db which corresponds to 10V RMS measured across the 100,000 ohm filter output circuit. In all applications the plate circuit of the tube connection to the filter input must be shunt fed. A plate blocking condenser will not be necessary as it is incorporated in the filter circuit.

The circuit shown in the schematic diagram comprises an effective amateur speech amplifier and river unit due to the excellent voltage regulation of the output signal. This desirable driver characteristic has been obtained by using a 6AS7G twin triode tube which possesses a very low AC plate to plate resistance. This tube is capable of supplying a clean 10 watts of audio power which is adequate for driving any of the popular Class B modulator tubes having output ratings up to 500 watts. The voltage gain of the unit is quite adequate for high impedance dynamic or crystal microphones.

The speech amplifier illustrated has been constructed on a 7" x 15" x 3" chassis base. All of the large components, such as the transformers, filter condensers, and tubes are mounted on the top of the chassis. The one exception is the filter choke, which has been mounted on the underside directly beneath the power transformer. If any other mechanical arrangement of parts is employed, be sure to locate the speech filter and the interstage transformer well away from the power transformer and filter choke to minimize hum pickup from these sources.

The circuit wiring is simple and straight-forward. The manner in which the chassis ground and the B minus return circuits are connected will have a large bearing on making the low level stages hum-free. Precautions to observe are as follows: Insulate the electrolytic filter and decoupling condenser cans and also the microphone input connector from the metal chassis. The B minus circuit wiring should be started at the power transformer high voltage center tap. Then progressively join together the B minus circuits of each stage as indicated on the schematic diagram by the heavy line until the 6SJ7 input stage is reached. At a point adjacent to the 6SJ7 socket, connect the B minus circuit to the metal chassis. It is important to make only this one B minus circuit connection to the chassis to obtain hum-free operation. Use shielded conductors at the points shown in the schematic diagram.

The choice of an output or driver transformer for the 6AS7G stage is dependent upon the location of the speech amplifier in relation to the rest of the transmitter. If the speech amplifier is mounted within several feet of the Class B modulator stage, a driver transformer should be employed and the secondary leads connected to the Class B grids by a length of three conductor cable. Select a stock Thordarson driver transformer with the correct stepdown ratio for the particular Class B tubes being employed. To determine the correct driver ratio, refer to the information supplied in the driver and modulator combination chart contained in your latest Thordarson 400 transformer catalog. If the speech amplifier is located a considerable distance from the modulator chassis, use stock output to line transformer T-22S70, The 500 ohm secondary of this transformer can then be matched to the Class B grids by employing a T-20D84 multi-match 500 ohm line to grid driver transformer.

### TECHNICAL DATA

| | |
|---|---|
| Power Output: | 10 watts or + 32.2 db (less than 5% distortion) adequate to drive Class B modulator tubes up to 500 watts output rating. |
| Input Circuit: | One high impedance microphone channel. |
| Output Impedance: | Optional 500 ohm line or Class B modu-grids. |
| Frequency Response: | Audio bandwidth restricted to 200 to 3500 cps. Response attenuated 20 db at twice cutoff frequencies (100 and 7000 cps). |
| Gain: | High impedance microphone input, 116 db |
| Hum Level: | 65 db below rated output |
| Tube Complement: | 1 6SJ7; 2 6J5; 1 6 AS7G; 1 5U4G. |
| Power Consumption: | 100 watts, 110-120 volts, 60 cps. |
| Chassis Size: | 7 X 15 X 3" Par-Metal B-4515 or equivalent. |

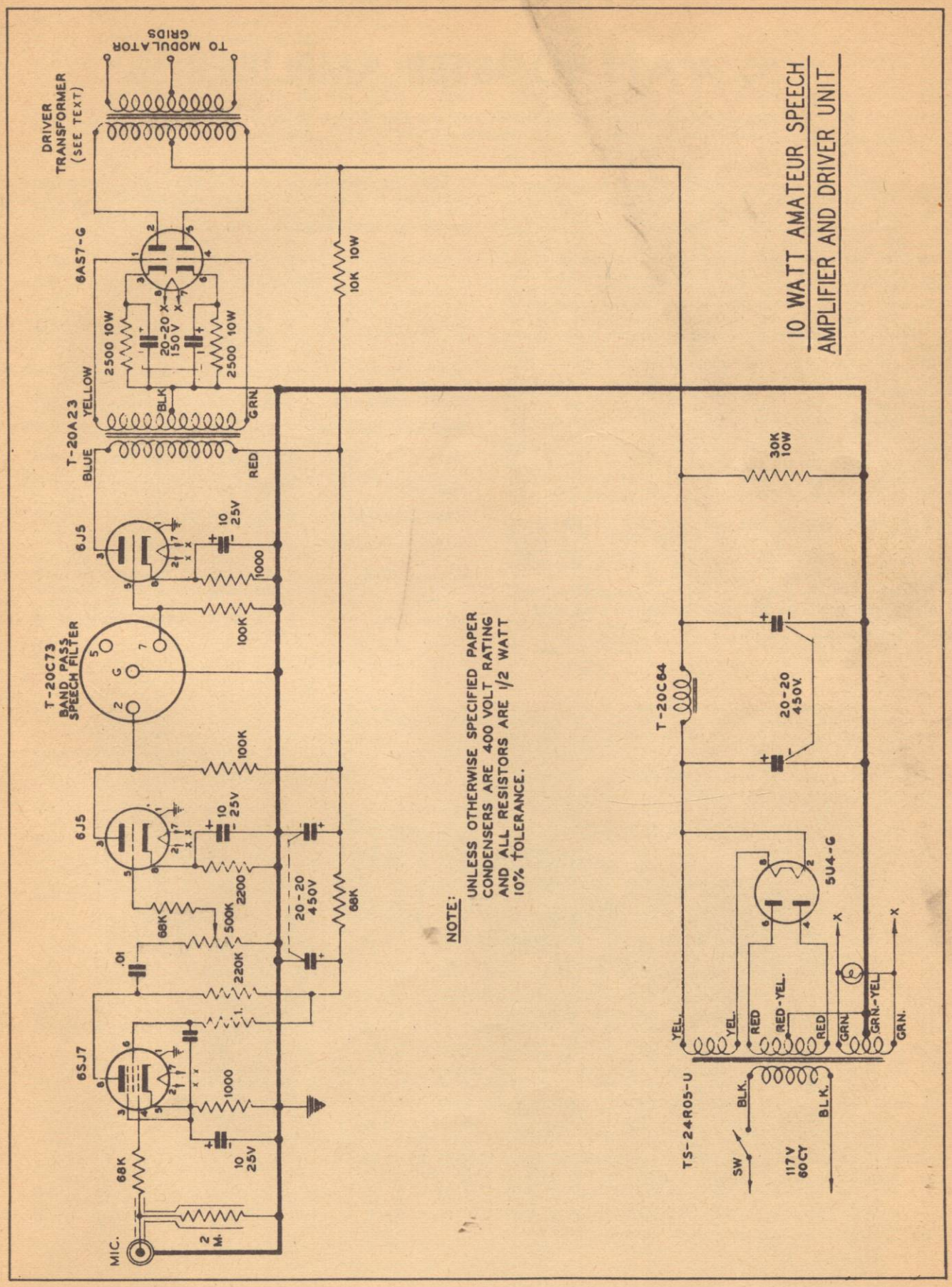
10 WATT AMATEUR SPEECH
AMPLIFIER AND DRIVER UNIT
TO MODULATOR GRIDS
DRIVER TRANSFORMER (SEE TEXT)
6AS7-G
2500 10W
20-20 150V
2500 10W
10K 10W
T-20A23
YELLOW
BLK
GRN.
BLUE
RED
6J5
10 25V
1000
100K
T-20C73 BAND PASS SPEECH FILTER
100K
6J5
10 25V
2200
68K
500K
.01
220K
20-20 450V
68K
6SJ7
1000
10 25V
68K
2 M.
MIC.
NOTE:
UNLESS OTHERWISE SPECIFIED PAPER CONDENSERS ARE 400 VOLT RATING AND ALL RESISTORS ARE 1/2 WATT 10% TOLERANCE.
30K 10W
T-20C64
20-20 450V.
5U4-G
YEL.
YEL.
RED
RED-YEL.
RED
GRN.
GRN.-YEL
GRN.
X
X
TS-24R05-U
BLK.
BLK.
SW
117V 60CY

# THORDARSON

## 50 WATT BOOSTER AMPLIFIER

*This amplifier is presented in this manual only as a general guide in the construction of amplifiers. The power and output transformers and the filter choke are available.*

This amplifier, as the name implies, is used to supplement or boost the power output of an existing P.A. amplifier or pre-amplifier. The power output of the unit is adequate for large indoor or outdoor sound installations. The booster has a 500 ohm input circuit so that it can be operated from a pre-amplifier and mixer unit having a 500 ohm output transformer. Due to the low impedance input of the booster it may be operated several hundred feet from the pre-amplifier unit, if required. As the overall gain of the booster amplifier is 40.4 db, full output will be obtained when a signal level of than 0 db (1.73 V across 500 ohms) is applied to the input.

This amplifier may also be excited from any existing P.A. amplifier when the audio power requirements are greater than could be supplied by the P.A. amplifier alone. For example, the booster amplifier could readily be used with the 25 watt amplifier shown on page 146. To do this, connect the normal speaker load to the 25 watt amplifier; then connect the input of the booster across the 4 ohm input impedance tap. When employing any other amplifier to excite the booster, always connect the input across the lowest impedance voice coil tap available. The audio level delivered to the booster speakers can be controlled independently by the booster gain control.

This amplifier employs two type 807 tubes in the output stage operating Class $AB_2$. The driving power is supplied by a pair of 6V6 tubes triode connected. The output transformer has a selection of secondary taps so that an impedance match may be obtained for any speaker load.

The power supply is located on the amplifier chassis. The 807 screen and 6V6 plate potential is obtained from a tap on the power supply bleeder resistor. The grid bias for the 807 tubes is obtained from a semi-fixed voltage source.

When constructing this unit, position the input transformer well away from the power supply components to keep inductive hum pickup to a minimum. Also shield the leads so indicated on the schematic diagram.

TECHNICAL DATA

| | |
|---|---|
| Power Output: | 50 watts or + 39.2 db (less than 8% distortion). |
| Input Circuit: | One 500, 250, or 50 ohm input. |
| Output Impedances: | 4, 8, 15, 250, 500 ohms. |
| Frequency Response: | ± 2 db from 50 to 10,000 cps. |
| Gain: | 40.4 db with 500 ohm input. |
| Hum Level: | 70 db below rated output. |
| Tube Complement: | 2 6V6GT; 2 807; 2 5U4G. |
| Power Consumption: | 190 watts, 110-120 volts, 60 cy. |
| Chassis Size: | 8 X 17 X 2" Par-Metal # B-4531 or equivalent. |
| Panel Size: | 8-3/4 X 19 X 1/8" Par-Metal # 6604 or equivalent. |

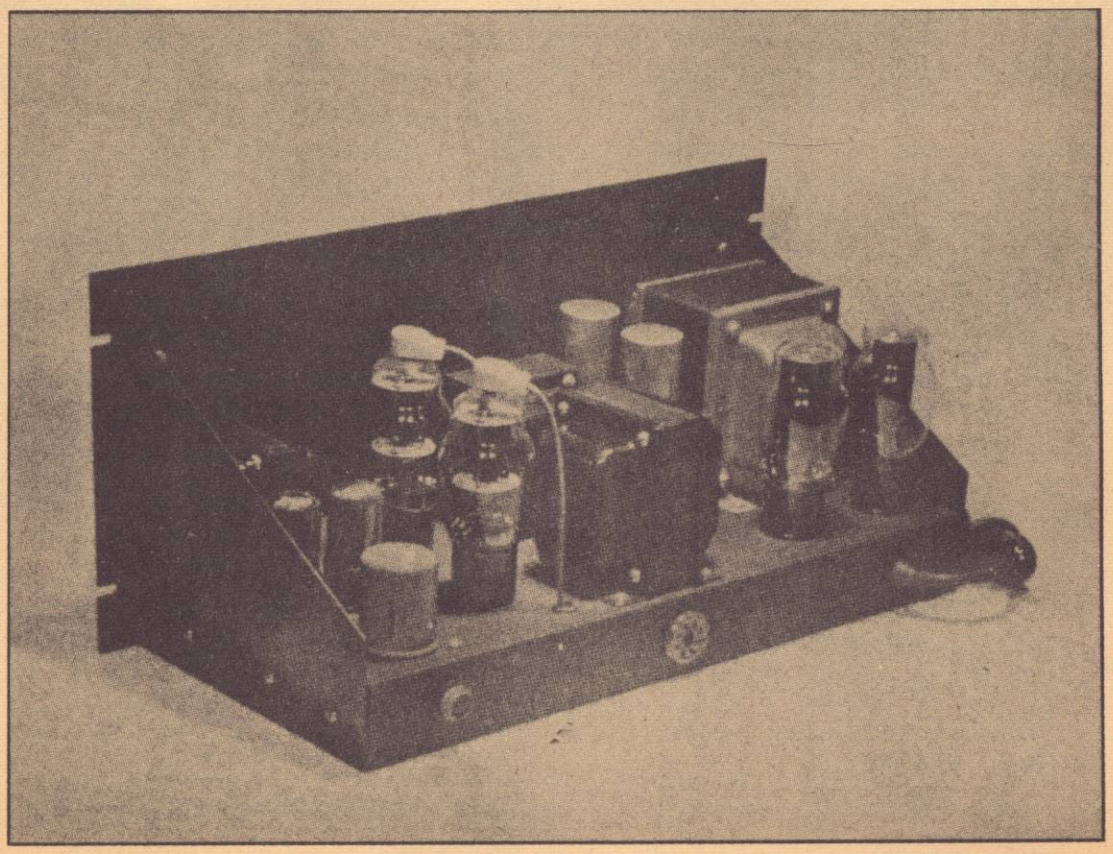

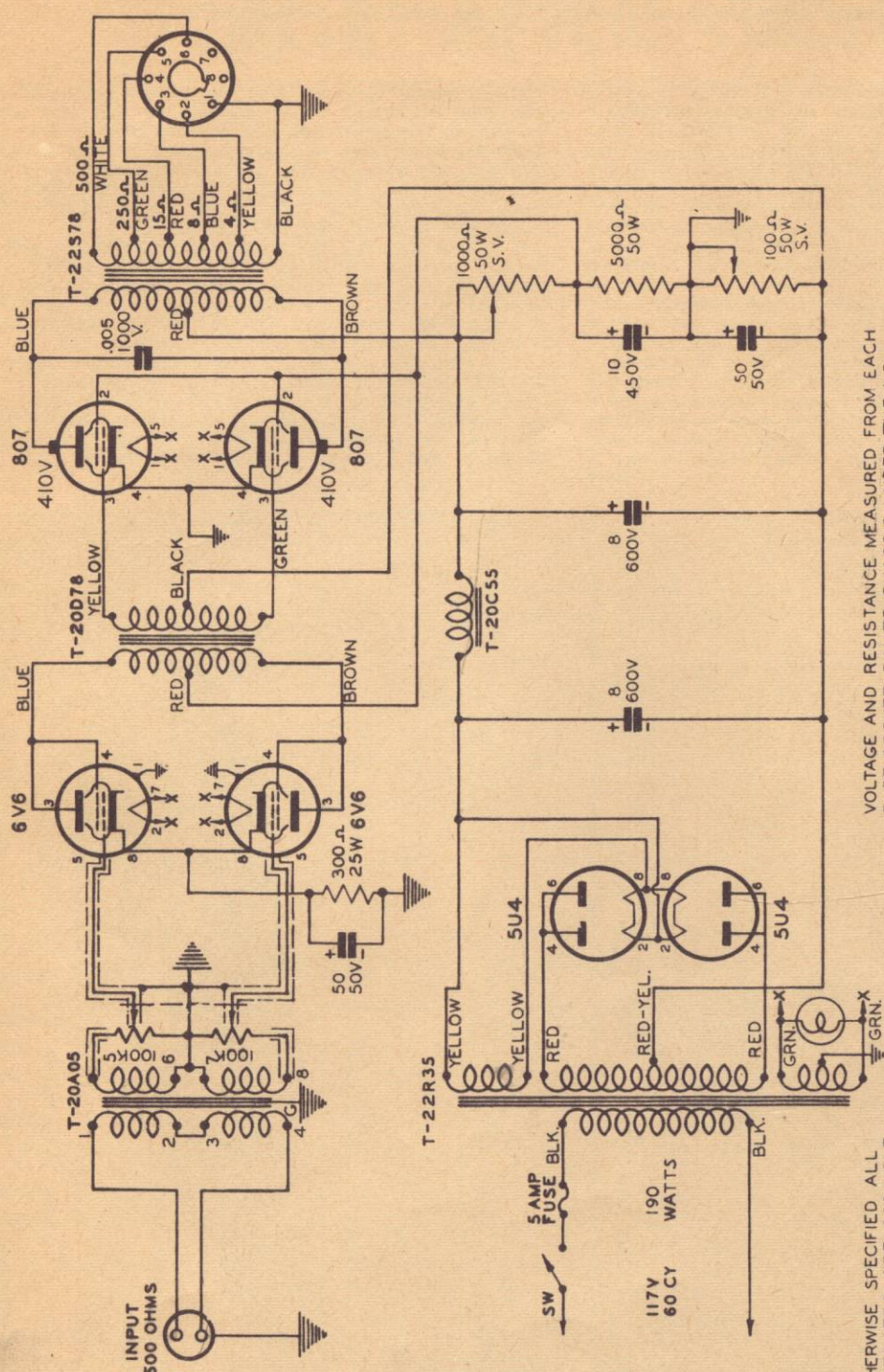


# 50 WATT BOOSTER AMPLIFIER

VOLTAGE AND RESISTANCE MEASURED FROM EACH TUBE SOCKET PIN TO CHASSIS UNDER THE NO SIGNAL CONDITION. VOLTAGES INDICATED ARE FOR 117V AC LINE OPERATION.

TUBE SOCKET PIN NUMBERS

| TUBE TYPE | 1 | | 2 | | 3 | | 4 | | 5 | | 6 | | 7 | | 8 | |
|---|---|---|---|---|---|---|---|---|---|---|---|---|---|---|---|---|
| | VOLTS | OHMS | VOLTS | OHMS | VOLTS | OHMS | VOLTS | OHMS | VOLTS | OHMS | VOLTS | OHMS | VOLTS | OHMS | VOLTS | OHMS |
| 6V6 DRIVER | 0 | 0 | 3.15 AC | 0 | 280 | 5.4K | 280 | 5.4K | 0 | 2.5K | — | — | 3.15AC | 0 | 17.5 | 300 |
| 807 OUTPUT | 3.15AC | 0 | 295 | 5K | -22.5 | 145 | 0 | 0 | 3.15AC | 0 | — | — | — | — | — | — |
| 5U4 RECT. | — | — | 420 | 6K | — | — | 420AC | 100 | — | — | 420AC | 100 | — | — | 420 | 6K |

VOLTAGE READINGS WERE TAKEN WITH AN RCA VOLT-OHMYST #195. TO DUPLICATE THESE READINGS A METER HAVING AN EQUIVALENT HIGH RESISTANCE MUST BE USED.

NOTE:
UNLESS OTHERWISE SPECIFIED ALL PAPER CONDENSERS ARE 400 VOLT RATINGS AND ALL RESISTORS ARE ½ WATT 10% TOLERANCE.

# THORDARSON

## QUICK HEATING PAGING AMPLIFIER

*This amplifier is presented in this manual only as a general guide in the construction of amplifiers. The power and output transformers and the filter choke are available.*

This self contained unit finds the main application in small offices or business establishments for paging purposes. Here the owner often wishes to call his secretary to his office or call other employees to the telephone.

The unit uses quick heating battery type tubes and a selenium rectifier so that the primary circuit will be energized only during the period when the push-to-talk switch is depressed. This feature, while providing a savings in power, also allows the amplifier to be constructed as a very compact assembly; as the heating of components is not a factor due to the intermittent operation.

The 3Q5 output stage is capable of approximately 300 milliwatts of audio power. If efficient speakers are used, this is adequate for moderately quiet office applications. A 4 inch PM speaker effectively functions as a microphone. A volume control is provided to adjust the sound level at the remote speakers. The T-22R12 power transformer provides AC line isolation for the half wave selenium rectifier circuit. The 50 Ma. battery tubes receive their filament current from the high voltage B. supply. When wiring the circuit, it should be noted that the series connection of the 3Q5 tube is used. Before placing the unit into operation, be sure to adjust the 500 ohm potentiometer to 4.2 volts or a 50 Ma. DC current through the filament circuit. When constructing the unit, the main precaution to observe is to position the T-20A04 V.C. to grid transformer well away from the power transformer and filter choke. Also rotate this input transformer to obtain minimum hum pickup.

If a selective call system is desired, a single pole multi-position selector switch should be connected into the output circuit so that any remote speaker station desired can be selected at will. When wiring up the remote speakers, use at least # 18 twisted pair wire to keep the audio power drop in the line resistance as low as possible.

This unit may also be made to function as a conventional two-way inter-communication system by means of a simple circuit modification. This change requires the addition of a low capacity D.P.D.T. lever action switch, which transfers the local and remote mic-speakers from the output to input circuit or from "listen" to "talk" position.

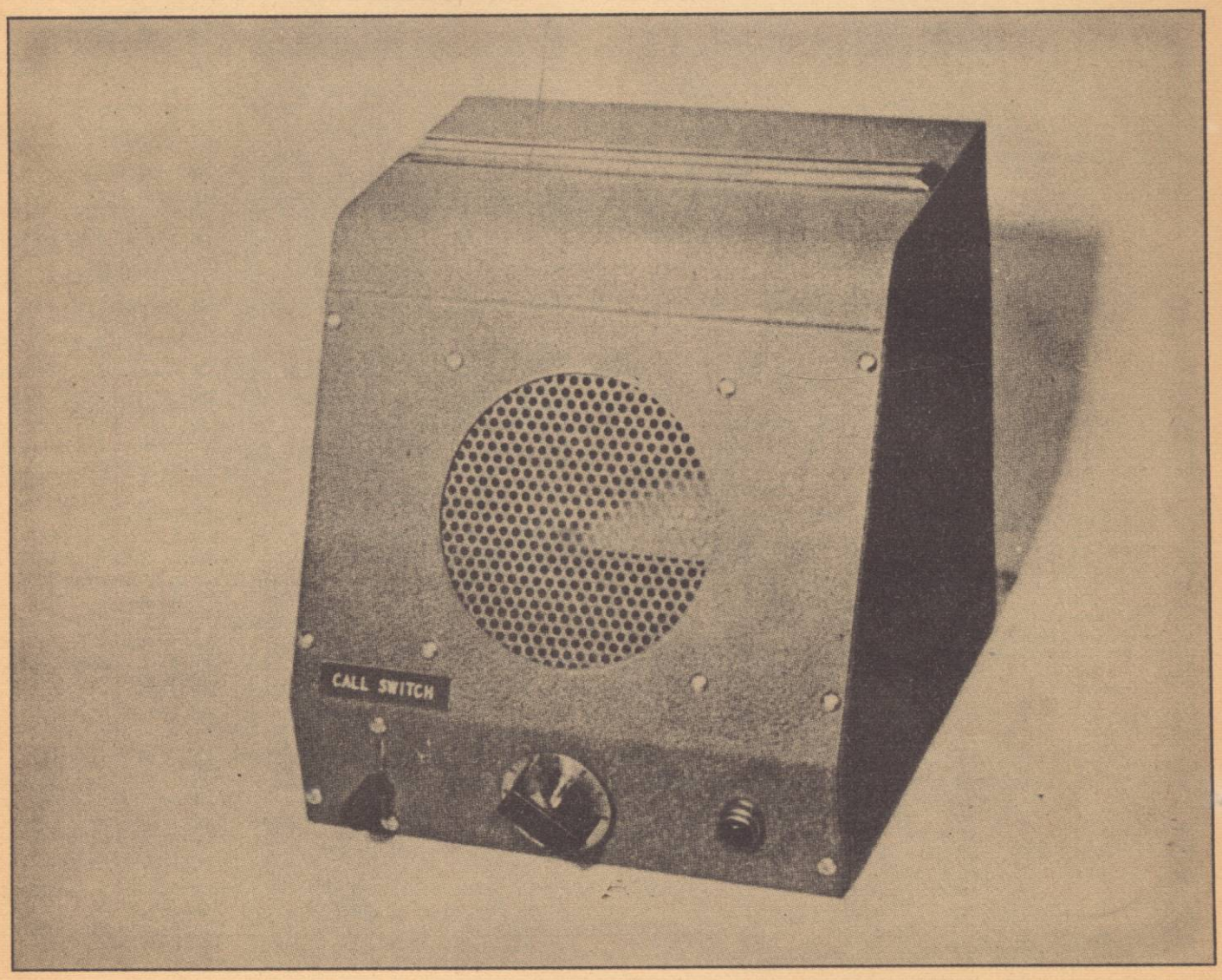

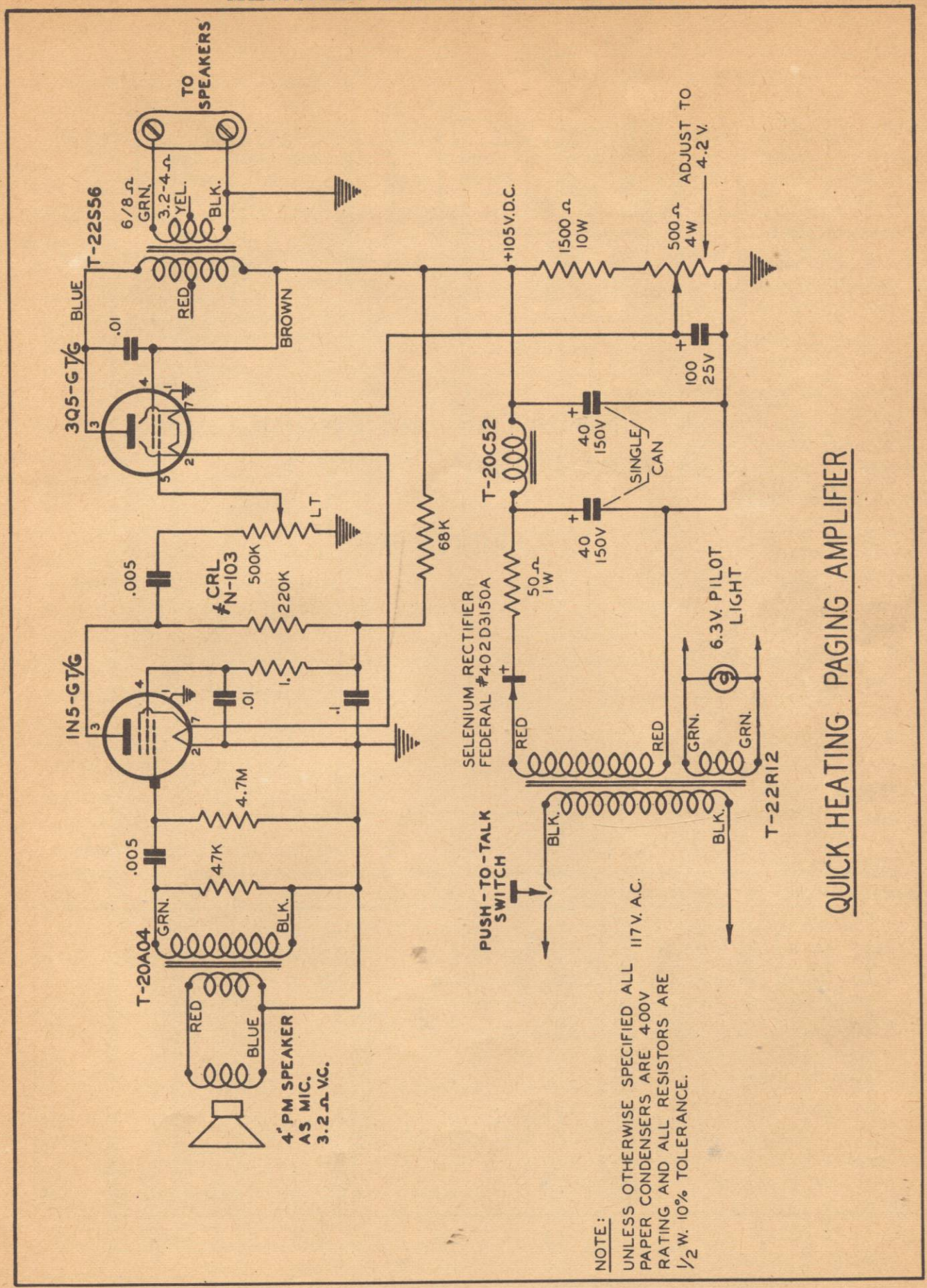
TO SPEAKERS
6/8 Ω
GRN.
3.2-4 Ω
YEL.
BLK.
T-22S56
BLUE
RED
BROWN
.01
3Q5-GT/G
LT
.005
CRL #N-103
500K
220K
68K
IN5-GT/G
1.
.01
.1
4.7M
.005
47K
GRN.
BLK.
T-20A04
RED
BLUE
4" PM SPEAKER AS MIC. 3.2 Ω V.C.
+105V.D.C.
1500 Ω 10W
500 Ω 4W
ADJUST TO 4.2 V.
100 25V
T-20C52
40 150V
SINGLE CAN
40 150V
50 Ω 1W
SELENIUM RECTIFIER FEDERAL #402D3150A
RED
RED
6.3V. PILOT LIGHT
GRN.
GRN.
T-22R12
BLK.
BLK.
PUSH-TO-TALK SWITCH
117 V. A.C.
NOTE:
UNLESS OTHERWISE SPECIFIED ALL PAPER CONDENSERS ARE 400V RATING AND ALL RESISTORS ARE 1/2 W. 10% TOLERANCE.
QUICK HEATING PAGING AMPLIFIER

## R L AND C NETWORKS

| DIAGRAM | USE | FORMULA | DIAGRAM | USE | FORMULA | DIAGRAM | USE | FORMULA |
|---|---|---|---|---|---|---|---|---|
| 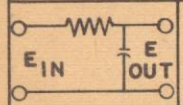  | LOW PASS R-C | T = RC | 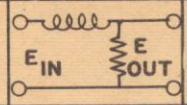  | LOW PASS R-L | $T = \frac{L}{R}$ | 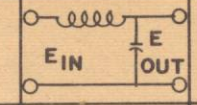  | LOW PASS L-C | $f = \frac{0.1592}{\sqrt{LC}}$ |
| 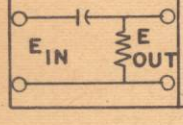  | HIGH PASS R-C | T = RC | 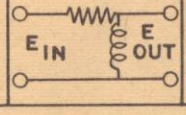  | HIGH PASS R-L | $T = \frac{L}{R}$ | 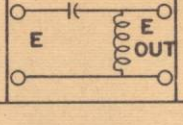  | HIGH PASS L-C | $f = \frac{0.1592}{\sqrt{LC}}$ |

## ATTENUATOR NETWORK SYMMETRICAL T AND H

2 = 500 OHMS

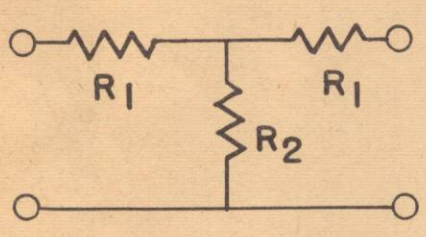


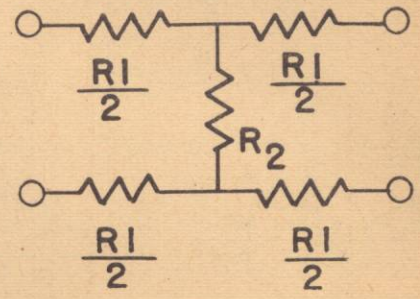


| ATTENUATION IN DB. | SERIES ARM $R_1$ IN OHMS | SHUNT ARM $R_2$ IN OHMS | $1000/R_2$ | LOG 10 $R_2$ |
|---|---|---|---|---|
| 0.0 | 0.0 | Inf. | 0.0000 | Interpolate R2 On This Column |
| 0.2 | 5.8 | 21.75K | 0.0461 | |
| 0.4 | 11.5 | 10.85K | 0.0921 | |
| 0.6 | 17.3 | 7.23K | 0.1383 | |
| 0.8 | 23.0 | 5.42K | 0.1845 | |
| 1.0 | 28.8 | 4.33K | 0.2308 | |
| 2.0 | 57.3 | 2,152 | 0.465 | |
| 3.0 | 85.5 | 1,419 | 0.705 | |
| 4.0 | 113.1 | 1,048 | 0.954 | |
| 5.0 | 140.1 | 822 | 1.216 | |
| 6.0 | 166.1 | 669 | 1.494 | 2.826 |
| 7.0 | 191.2 | 558 | | 2.747 |
| 8.0 | 215.3 | 473.1 | Interpolate R2 On This Column | 2.675 |
| 9.0 | 238.1 | 405.9 | | 2.608 |
| 10.0 | 259.7 | 351.4 | | 2.546 |
| 20.0 | 409.1 | 101.0 | | 2.004 |
| 30.0 | 469.3 | 31.65 | | 1.500 |
| 40.0 | 490.1 | 10.00 | | 1.00 |
| 50.0 | 496.8 | 3.162 | | 0.50 |
| 60.0 | 499.0 | 1.00 | | 0.00 |
| 80.0 | 499.0 | 0.100 | | -1.00 |
| 100.0 | 500.0 | 0.01 | | -2.00 |

## VOLTAGE, DECIBEL and POWER CHART

The DB chart below indicates DB level for any ratio of voltage or power up to 120 DB. To interpolate this chart for values over 20 DB subtract 20, 30 or 40 DB etc. from the total until the remainder falls in the first part of the chart, than add the values subtracted as taken from the last part of the chart. As an example: A voltage ratio of 300 is desired: the corresponding DB for 100 is 40. This leaves a balance voltage ratio of 3, which is approximately 9.8 DB, 9.8 40 49.8 DB.

| *Voltage Ratio* | *Power Ratio* | *—db+* | *Voltage Ratio* | *Power Ratio* | *Voltage Ratio* | *Power Ratio* | *—db+* | *Voltage Ratio* | *Power Ratio* | *Voltage Ratio* | *Power Ratio* | *—db+* | *Voltage Ratio* | *Power Ratio* |
|---|---|---|---|---|---|---|---|---|---|---|---|---|---|---|
| **1.0000** | **1.0000** | **0** | **1.000** | **1.000** | **.4467** | **.1995** | **7.0** | **2.239** | **5.012** | **.1995** | **.03981** | **14.0** | **5.012** | **25.12** |
| .9886 | .9772 | .1 | 1.012 | 1.023 | .4416 | .1950 | 7.1 | 2.265 | 5.129 | .1972 | .03890 | 14.1 | 5.070 | 25.70 |
| .9772 | .9550 | .2 | 1.023 | 1.047 | .4365 | .1905 | 7.2 | 2.291 | 5.248 | .1950 | .03802 | 14.2 | 5.129 | 26.30 |
| .9661 | .9333 | .3 | 1.035 | 1.072 | .4315 | .1862 | 7.3 | 2.317 | 5.370 | .1928 | .03715 | 14.3 | 5.188 | 26.92 |
| .9550 | .9120 | .4 | 1.047 | 1.096 | .4266 | .1820 | 7.4 | 2.344 | 5.495 | .1905 | .03631 | 14.4 | 5.248 | 27.54 |
| .9441 | .8913 | .5 | 1.059 | 1.122 | .4217 | .1778 | 7.5 | 2.371 | 5.623 | .1884 | .03548 | 14.5 | 5.309 | 28.18 |
| .9333 | .8710 | .6 | 1.072 | 1.148 | .4169 | .1738 | 7.6 | 2.399 | 5.754 | .1862 | .03467 | 14.6 | 5.370 | 28.84 |
| .9226 | .8511 | .7 | 1.084 | 1.175 | .4121 | .1698 | 7.7 | 2.427 | 5.888 | .1841 | .03388 | 14.7 | 5.433 | 29.51 |
| .9120 | .8318 | .8 | 1.096 | 1.202 | .4074 | .1660 | 7.8 | 2.455 | 6.026 | .1820 | .03311 | 14.8 | 5.495 | 30.20 |
| .9016 | .8128 | .9 | 1.109 | 1.230 | .4027 | .1622 | 7.9 | 2.483 | 6.166 | .1799 | .03236 | 14.9 | 5.559 | 30.90 |
| **.8913** | **.7943** | **1.0** | **1.122** | **1.259** | **.3981** | **.1585** | **8.0** | **2.512** | **6.310** | **.1778** | **.03162** | **15.0** | **5.623** | **31.62** |
| .8810 | .7762 | 1.1 | 1.135 | 1.288 | .3936 | .1549 | 8.1 | 2.541 | 6.457 | .1758 | .03090 | 15.1 | 5.689 | 32.36 |
| .8710 | .7586 | 1.2 | 1.148 | 1.318 | .3890 | .1514 | 8.2 | 2.570 | 6.607 | .1738 | .03020 | 15.2 | 5.754 | 33.11 |
| .8610 | .7413 | 1.3 | 1.161 | 1.349 | .3846 | .1479 | 8.3 | 2.600 | 6.761 | .1718 | .02951 | 15.3 | 5.821 | 33.88 |
| .8511 | .7244 | 1.4 | 1.175 | 1.380 | .3802 | .1445 | 8.4 | 2.630 | 6.918 | .1698 | .02884 | 15.4 | 5.888 | 34.67 |
| .8414 | .7079 | 1.5 | 1.189 | 1.413 | .3758 | .1413 | 8.5 | 2.661 | 7.079 | .1679 | .02818 | 15.5 | 5.957 | 35.48 |
| .8318 | .6918 | 1.6 | 1.202 | 1.445 | .3715 | .1380 | 8.6 | 2.692 | 7.244 | .1660 | .02754 | 15.6 | 6.026 | 36.31 |
| .8222 | .6761 | 1.7 | 1.216 | 1.479 | .3673 | .1349 | 8.7 | 2.723 | 7.413 | .1641 | .02692 | 15.7 | 6.095 | 37.15 |
| .8128 | .6607 | 1.8 | 1.230 | 1.514 | .3631 | .1318 | 8.8 | 2.754 | 7.586 | .1622 | .02630 | 15.8 | 6.166 | 38.02 |
| .8035 | .6457 | 1.9 | 1.245 | 1.549 | .3589 | .1288 | 8.9 | 2.786 | 7.762 | .1603 | .02570 | 15.9 | 6.237 | 38.90 |
| **.7943** | **.6310** | **2.0** | **1.259** | **1.585** | **.3548** | **.1259** | **9.0** | **2.818** | **7.943** | **.1585** | **.02512** | **16.0** | **6.310** | **39.81** |
| .7852 | .6166 | 2.1 | 1.274 | 1.622 | .3508 | .1230 | 9.1 | 2.851 | 8.128 | .1567 | .02455 | 16.1 | 6.383 | 40.74 |
| .7762 | .6026 | 2.2 | 1.288 | 1.660 | .3467 | .1202 | 9.2 | 2.884 | 8.318 | .1549 | .02399 | 16.2 | 6.457 | 41.69 |
| .7674 | .5888 | 2.3 | 1.303 | 1.698 | .3428 | .1175 | 9.3 | 2.917 | 8.511 | .1531 | .02344 | 16.3 | 6.531 | 42.66 |
| .7586 | .5754 | 2.4 | 1.318 | 1.738 | .3388 | .1148 | 9.4 | 2.951 | 8.710 | .1514 | .02291 | 16.4 | 6.607 | 43.65 |
| .7499 | .5623 | 2.5 | 1.334 | 1.778 | .3350 | .1122 | 9.5 | 2.985 | 8.913 | .1496 | .02239 | 16.5 | 6.683 | 44.67 |
| .7413 | .5495 | 2.6 | 1.349 | 1.820 | .3311 | .1096 | 9.6 | 3.020 | 9.120 | .1479 | .02188 | 16.6 | 6.761 | 45.71 |
| .7328 | .5370 | 2.7 | 1.365 | 1.862 | .3273 | .1072 | 9.7 | 3.055 | 9.333 | .1462 | .02138 | 16.7 | 6.839 | 46.77 |
| .7244 | .5248 | 2.8 | 1.380 | 1.905 | .3236 | .1047 | 9.8 | 3.090 | 9.550 | .1445 | .02089 | 16.8 | 6.918 | 47.86 |
| .7161 | .5129 | 2.9 | 1.396 | 1.950 | .3199 | .1023 | 9.9 | 3.126 | 9.772 | .1429 | .02042 | 16.9 | 6.998 | 48.98 |
| **.7079** | **.5012** | **3.0** | **1.413** | **1.995** | **.3162** | **.1000** | **10.0** | **3.162** | **10.000** | **.1413** | **.01995** | **17.0** | **7.079** | **50.12** |
| .6998 | .4898 | 3.1 | 1.429 | 2.042 | .3126 | .09772 | 10.1 | 3.199 | 10.23 | .1396 | .01950 | 17.1 | 7.161 | 51.29 |
| .6918 | .4786 | 3.2 | 1.445 | 2.089 | .3090 | .09550 | 10.2 | 3.236 | 10.47 | .1380 | .01905 | 17.2 | 7.244 | 52.48 |
| .6839 | .4677 | 3.3 | 1.462 | 2.138 | .3055 | .09333 | 10.3 | 3.273 | 10.72 | .1365 | .01862 | 17.3 | 7.328 | 53.70 |
| .6761 | .4571 | 3.4 | 1.479 | 2.188 | .3020 | .09120 | 10.4 | 3.311 | 10.96 | .1349 | .01820 | 17.4 | 7.413 | 54.95 |
| .6683 | .4467 | 3.5 | 1.496 | 2.239 | .2985 | .08913 | 10.5 | 3.350 | 11.22 | .1334 | .01778 | 17.5 | 7.499 | 56.23 |
| .6607 | .4365 | 3.6 | 1.514 | 2.291 | .2951 | .08710 | 10.6 | 3.388 | 11.48 | .1318 | .01738 | 17.6 | 7.586 | 57.54 |
| .6531 | .4266 | 3.7 | 1.531 | 2.344 | .2917 | .08511 | 10.7 | 3.428 | 11.75 | .1303 | .01698 | 17.7 | 7.674 | 58.88 |
| .6457 | .4169 | 3.8 | 1.549 | 2.399 | .2884 | .08318 | 10.8 | 3.467 | 12.02 | .1288 | .01660 | 17.8 | 7.762 | 60.26 |
| .6383 | .4074 | 3.9 | 1.567 | 2.455 | .2851 | .08128 | 10.9 | 3.508 | 12.30 | .1274 | .01622 | 17.9 | 7.852 | 61.66 |
| **.6310** | **.3981** | **4.0** | **1.585** | **2.512** | **.2818** | **.07943** | **11.0** | **3.548** | **12.59** | **.1259** | **.01585** | **18.0** | **7.943** | **63.10** |
| .6237 | .3890 | 4.1 | 1.603 | 2.570 | .2786 | .07762 | 11.1 | 3.589 | 12.88 | .1245 | .01549 | 18.1 | 8.035 | 64.57 |
| .6166 | .3802 | 4.2 | 1.622 | 2.630 | .2754 | .07586 | 11.2 | 3.631 | 13.18 | .1230 | .01514 | 18.2 | 8.128 | 66.07 |
| .6095 | .3715 | 4.3 | 1.641 | 2.692 | .2723 | .07413 | 11.3 | 3.673 | 13.49 | .1216 | .01479 | 18.3 | 8.222 | 67.61 |
| .6026 | .3631 | 4.4 | 1.660 | 2.754 | .2692 | .07244 | 11.4 | 3.715 | 13.80 | .1202 | .01445 | 18.4 | 8.318 | 69.18 |
| .5957 | .3548 | 4.5 | 1.679 | 2.818 | .2661 | .07079 | 11.5 | 3.758 | 14.13 | .1189 | .01413 | 18.5 | 8.414 | 70.79 |
| .5888 | .3467 | 4.6 | 1.698 | 2.884 | .2630 | .06918 | 11.6 | 3.802 | 14.45 | .1175 | .01380 | 18.6 | 8.511 | 72.44 |
| .5821 | .3388 | 4.7 | 1.718 | 2.951 | .2600 | .06761 | 11.7 | 3.846 | 14.79 | .1161 | .01349 | 18.7 | 8.610 | 74.13 |
| .5754 | .3311 | 4.8 | 1.738 | 3.020 | .2570 | .06607 | 11.8 | 3.890 | 15.14 | .1148 | .01318 | 18.8 | 8.710 | 75.86 |
| .5689 | .3236 | 4.9 | 1.758 | 3.090 | .2541 | .06457 | 11.9 | 3.936 | 15.49 | .1135 | .01288 | 18.9 | 8.811 | 77.62 |
| **.5623** | **.3162** | **5.0** | **1.778** | **3.162** | **.2512** | **.06310** | **12.0** | **3.981** | **15.85** | **.1122** | **.01259** | **19.0** | **8.913** | **79.43** |
| .5559 | .3090 | 5.1 | 1.799 | 3.236 | .2483 | .06166 | 12.1 | 4.027 | 16.22 | .1109 | .01230 | 19.1 | 9.016 | 81.28 |
| .5495 | .3020 | 5.2 | 1.820 | 3.311 | .2455 | .06026 | 12.2 | 4.074 | 16.60 | .1096 | .01202 | 19.2 | 9.120 | 83.18 |
| .5433 | .2951 | 5.3 | 1.841 | 3.388 | .2427 | .05888 | 12.3 | 4.121 | 16.98 | .1084 | .01175 | 19.3 | 9.226 | 85.11 |
| .5370 | .2884 | 5.4 | 1.862 | 3.467 | .2399 | .05754 | 12.4 | 4.169 | 17.38 | .1072 | .01148 | 19.4 | 9.333 | 87.10 |
| .5309 | .2818 | 5.5 | 1.884 | 3.548 | .2371 | .05623 | 12.5 | 4.217 | 17.78 | .1059 | .01122 | 19.5 | 9.441 | 89.13 |
| .5248 | .2754 | 5.6 | 1.905 | 3.631 | .2344 | .05495 | 12.6 | 4.266 | 18.20 | .1047 | .01096 | 19.6 | 9.550 | 91.20 |
| .5188 | .2692 | 5.7 | 1.928 | 3.715 | .2317 | .05370 | 12.7 | 4.315 | 18.62 | .1035 | .01072 | 19.7 | 9.661 | 93.33 |
| .5129 | .2630 | 5.8 | 1.950 | 3.802 | .2291 | .05248 | 12.8 | 4.365 | 19.05 | .1023 | .01047 | 19.8 | 9.772 | 95.50 |
| .5070 | .2570 | 5.9 | 1.972 | 3.890 | .2265 | .05129 | 12.9 | 4.416 | 19.50 | .1012 | .01023 | 19.9 | 9.886 | 97.72 |
| **.5012** | **.2512** | **6.0** | **1.995** | **3.981** | **.2239** | **.05012** | **13.0** | **4.467** | **19.95** | **.1000** | **.01000** | **20.0** | **10.000** | **100.00** |
| .4955 | .2455 | 6.1 | 2.018 | 4.074 | .2213 | .04898 | 13.1 | 4.519 | 20.42 | | $10^{-3}$ | 30 | | $10^{3}$ |
| .4898 | .2399 | 6.2 | 2.042 | 4.169 | .2188 | .04786 | 13.2 | 4.571 | 20.89 | $10^{-2}$ | $10^{-4}$ | 40 | $10^{2}$ | $10^{4}$ |
| .4842 | .2344 | 6.3 | 2.065 | 4.266 | .2163 | .04677 | 13.3 | 4.624 | 21.38 | | $10^{-5}$ | 50 | | $10^{5}$ |
| .4786 | .2291 | 6.4 | 2.089 | 4.365 | .2138 | .04571 | 13.4 | 4.677 | 21.88 | $10^{-3}$ | $10^{-6}$ | 60 | $10^{3}$ | $10^{6}$ |
| .4732 | .2239 | 6.5 | 2.113 | 4.467 | .2113 | .04467 | 13.5 | 4.732 | 22.39 | | $10^{-7}$ | 70 | | $10^{7}$ |
| .4677 | .2188 | 6.6 | 2.138 | 4.571 | .2089 | .04365 | 13.6 | 4.786 | 22.91 | $10^{-4}$ | $10^{-8}$ | 80 | $10^{4}$ | $10^{8}$ |
| .4624 | .2138 | 6.7 | 2.163 | 4.677 | .2065 | .04266 | 13.7 | 4.842 | 23.44 | | $10^{-9}$ | 90 | | $10^{9}$ |
| .4571 | .2089 | 6.8 | 2.188 | 4.786 | .2042 | .04169 | 13.8 | 4.898 | 23.99 | $10^{-5}$ | $10^{-10}$ | 100 | $10^{5}$ | $10^{10}$ |
| .4519 | .2042 | 6.9 | 2.213 | 4.898 | .2018 | .04074 | 13.9 | 4.955 | 24.55 | | | | | |

# THORDARSON

## DUAL TONE CONTROL

Thordarson's development of this "Dual Tone Control" was prompted by the many requests of sound men for an effective tone compensating system to boost or attenuate the bass or treble frequencies independently of each other. Examination of the schematic diagram will show that the final circuit is simple and not at all complicated to construct. It is constructed on a small chassis, making it adaptable to practically any existing amplifier.

Operation is based on degeneration in the cathode circuit of a 6C5 or equivalent tube. If resistance is introduced in the cathode circuit, any signal developed by the tube will also appear across the resistance. This signal voltage is opposite in phase and in series with the voltage impressed on the grid and cathode of the tube. Degeneration takes place and the amplification of the tube is reduced. In this application the plate loading resistor R-6 is made small and the cathode resistor R-3 large so that a greater part of the voltage developed by the tube appears in the cathode circuit.

Since the circuit is resistive, there is little or no frequency discrimination at audio frequencies, and all frequencies are degenerated an equal amount. If the cathode resistance is shunted with an inductance (of the proper value), the resistance at low frequencies is practically shorted out due to the low reactance of the choke at low frequencies. Therefore, degeneration of the low frequencies is eliminated and the greater part of the signal developed by the tube appears across the load resistor R-6. The result is an increase in the low frequency response of the circuit. Likewise if a condenser (of the proper value) is shunted across the cathode resistor, the low reactance of the condenser at high frequencies reduces the impedance of the circuit and degeneration of the higher frequencies is reduced. The high frequency response of the circuit is thus increased.

Attenuation of the low frequencies can be accomplished by shunting the grid circuit of the following stage with a choke or inductance. It so happens that the value of the choke (described above) used in the bass boost circuit also has the correct value for an attenuation circuit. The high frequencies can be attenuated by shunting the same grid circuit with a suitable condenser.

The function of control R-5 is to introduce the choke CH-1 into either the cathode circuit for bass boost or the grid circuit for bass decrease. Control R-4 applies condenser C-2 to the cathode circuit for treble increase, or C-3 to the grid circuit for treble decrease. The controls are coupled to the cathode through condenser C-4 and to the following grid by a shielded lead. The small pictorial drawing illustrates clearly how connections are made to the controls.

To install the tone control unit into an existing amplifier, locate the coupling condenser in a resistance coupled stage (preferably the plate circuit of the phono or mixer stage of the amplifier, or at a point in the circuit where the maximum signal voltage applied to the tone stage grid circuit will never exceed 3.5 V. rms). Remove the condenser from the circuit and connect the shielded lead of condenser C-1 and the shielded lead of C-5 in its place. Make sure that the lead from C-1 connects to the plate to the tube preceding the tone control unit. Ground the shields of these leads to the amplifier to complete the ground circuit. Connect the unshielded lead to a well filtered point of the amplifier B supply circuit. A pair of twisted wires not over 3 feet long may be used for the filament supply.

It is also possible to build the tone control into an amplifier if there is adequate room and care is taken not to mount the choke and controls near the power transformer. The voltage gain of this tone stage measured with the controls in normal position is approximately unity or one. Curves are shown on opposite page illustrating the tone controls in the various positions.

### PARTS LIST

| Diagram Number | | Thordarson Part Number | | |
|---|---|---|---|---|
| CH-1 | | Tone Control Choke, T-20C74 | | |
| R-4 | | Dual Tone Control, R-1068X | | |
| R-5 | | Dual Tone Control, R-1068X | | |
| | Resistors | Ohms | Watts | Type |
| R-1 | | 250,000 | 1/2 | IRC BTS |
| R-2 | | 1,000 | 1 | IRC BTA |
| R-3 | | 20,000 | 1 | IRC BTA |
| R-6 | | 20,000 | 1 | IRC BTA |
| | Condensors | Mfd. | Voltage | Type |
| C-1 | | .1 | 400 | Cornell-Dubilier DT-4P1 |
| C-2 | | .05 | 400 | Cornell-Dubilier DT-4S5 |
| C-3 | | .01 | 400 | Cornell-Dubilier DT-4S1 |
| C-4 | | 12. | 250 | Aerovox PRS-250 |
| C-5 | | .1 | 400 | Cornell-Dubilier DT-4P1 |
| | Tube | | | |
| 1 | | Type 6C5 | | |
| | Miscellaneous Parts | | | |
| 1 | | Chassis 6" long, 3-1/2" wide, 3" high | | |
| 1 | | Chassis bottom plate | | |
| 4 | | 5-lug resistor mtg. strips | | |
| 2 | | 2-lug resistor mtg. strips | | |
| 1 | | 2-screw terminal board | | |
| 1 | | Octal socket Amphenol S8 | | |
| 2 | | Control knobs | | |
| 2 | | "Tone" control plates | | |

NOTE: The brands and types specified in the parts list were used in the original laboratory models. Parts of equivalent quality may be substituted except where physical limitations prohibit.

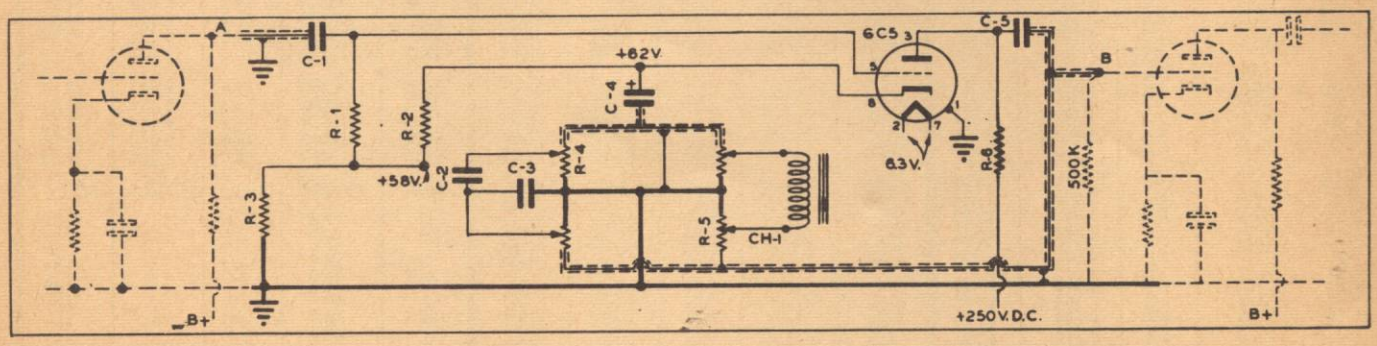

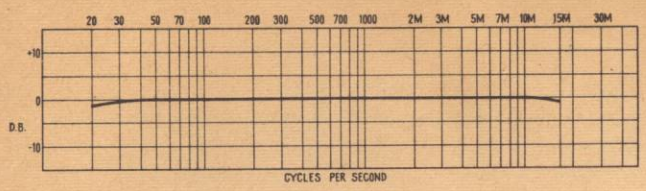


BASS CONTROL NORMAL
TREBLE CONTROL NORMAL

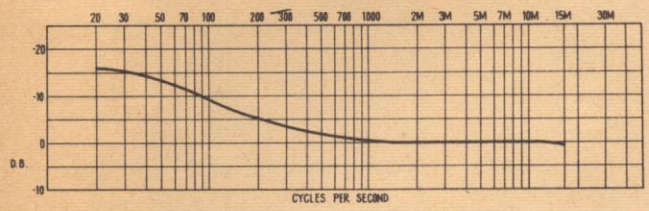


BASS CONTROL INCREASE
TREBLE CONTROL NORMAL

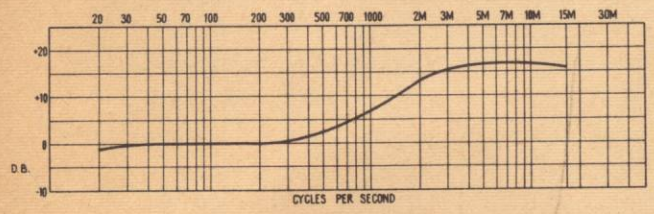


BASS CONTROL NORMAL
TREBLE CONTROL INCREASE

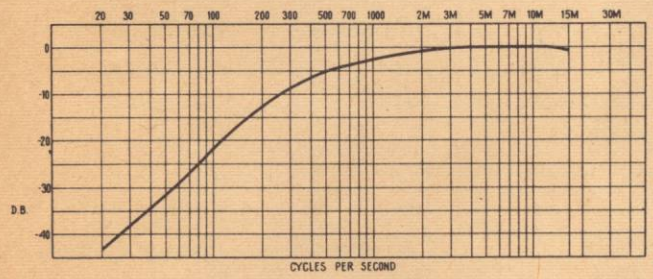


BASS CONTROL DECREASE
TREBLE CONTROL NORMAL

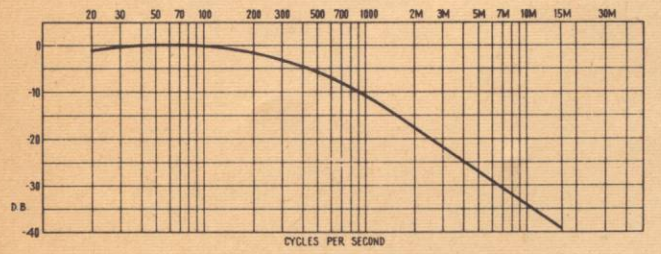


BASS CONTROL NORMAL
TREBLE CONTROL DECREASE

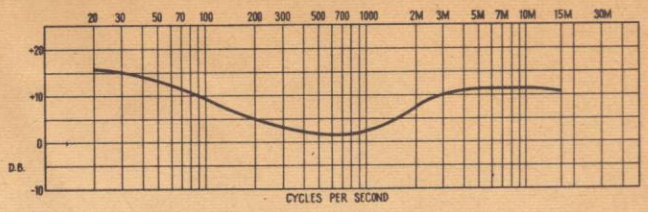


BASS CONTROL INCREASE
TREBLE CONTROL INCREASE

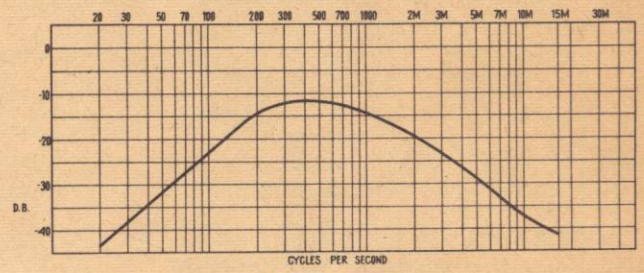


BASS CONTROL DECREASE
TREBLE CONTROL DECREASE

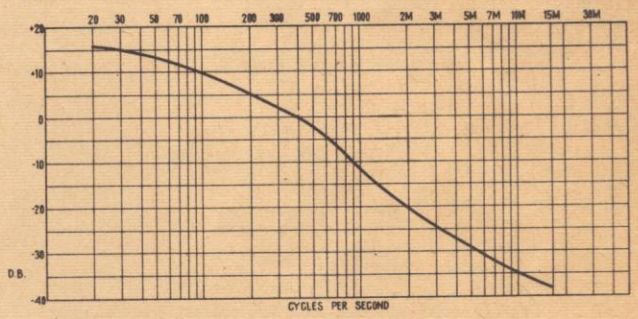


BASS CONTROL INCREASE
TREBLE CONTROL DECREASE

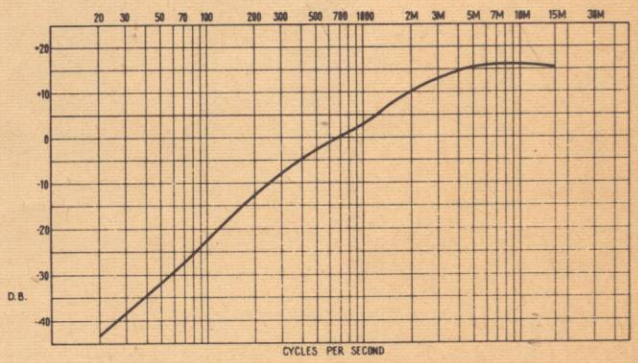


BASS CONTROL DECREASE
TREBLE CONTROL INCREASE

### IF TRANSFORMER COLOR CODE

Blue--Plate
Red--B+Lead
Green--Grid or Diode
Black*--Grid or Diode return
*When the secondary is center tapped, the second diode plate lead is green and black striped, and the black is used for the center tap lead.

### A. F. TRANSFORMERS

Blue--Plate lead of primary
Red--B+Lead (single or center-tapped)
Brown--Plate lead on Center-tapped primaries--Used as start lead when polarity is important.
Green--Grid lead to secondary
Black--Grid return (single or push pull)
Yellow--Grid lead on center-tapped secondaries--Used as start when polarity is important.

### POWER TRANSFORMERS

Black--Primary or Primary Common
Black and Yellow Striped--Primary Tap
Black and Red Striped--Primary Finish
Red--High voltage plate
Red and Yellow Striped--High voltage center tap
Yellow--Rectifier filament winding
Yellow and Blue Striped--Rectifier center tap
Green--Filament winding No. 1
Green and Yellow Striped--Center tap
Brown--Filament winding No. 2
Brown and Yellow Striped--Center tap
Slate--Filament winding No. 3
Slate and Yellow Striped--Center tap
Blue--Filament winding No. 4
Blue and Yellow Striped--Center tap
Orange--Filament winding No. 5
Orange and Yellow Striped--Center tap.

### LOUDSPEAKER VOICE COILS

Green--Finish
Black--Start.

### LOUDSPEAKER FIELD COILS

Black and Red--Start
Yellow and Red--Finish
Slate and Red--Tap.

### PILOT-LIGHTS--WITH MINIATURE BASE

| No. | Bead Color | Base | Volts | Amp |
|---|---|---|---|---|
| 40 | Brown | Screw | 6-8 | 0.15 |
| 41 | White | Screw | 2.5 | 0.50 |
| 42 | Green | Screw | 3.2 | 0.35 or 0.5 |
| 43 | White | Bayonet | 2.5 | 0.5 |
| 44 | Blue | Bayonet | 6-8 | 0.25 |
| 45 | White or Green | Bayonet | 3.2 | 0.35 or 0.5 |
| 46 | Blue (Frosted) | Screw | 6-8 | 0.25 |
| 47 | Brown | Bayonet | 6-8 | 0.15 |
| 48 | Pink | Screw | 2.0 | 0.06 |
| 49 | Pink | Bayonet | 2.0 | 0.06 |
| 50 | White | Screw | 6-8 | 0.2 |
| 51 | White (Frosted) | Bayonet | 6-8 | 0.2 |
| 55 | White | Bayonet | 6-8 | 0.4 |
| 292 | White | Screw | 2.9 | 0.17 |
| 292A | White | Bayonet | 2.9 | 0.17 |
| 1455 | Brown | Screw | 18.0 | 0.25 |
| 1455A | Brown | Bayonet | 18.0 | 0.25 |
| NE-51 | Neon Glow | Bayonet | 65/90 | 1/25 Watt |

Various units are used in Radio work, and it is often necessary to change from one form to another. The table given below will aid in changing quickly from one unit to another.

| MULTIPLY | BY | TO GET |
|---|---|---|
| Amperes | 1,000,000,000,000 | Micro-microamperes |
| Amperes | 1,000,000 | Microamperes |
| Amperes | 1,000 | Milliamperes |
| Cycles | .000001 | Megacycles |
| Cycles | .001 | Kilocycles |
| Farads | 1,000,000,000,000 | Micro-microfarads |
| Farads | 1,000,000 | Microfarads |
| Henries | 1,000,000 | Microhenries |
| Henries | 1,000 | Millihenries |
| Kilocycles | 1,000 | Cycles |
| Kilowatts | 1,000 | Watts |
| Megacycles | 1,000,000 | Cycles |
| Mhos | 1,000,000 | Micromhos |
| Mhos | 1,000 | Millimhos |
| Microamperes | .000001 | Amperes |
| Microfarads | .000001 | Farads |
| Microhenries | .000001 | Henries |
| Micromhos | .000001 | Mhos |
| Micro-ohms | .000001 | Ohms |
| Microvolts | .000001 | Volts |
| Micro-microfarads | .000000000001 | Farads |
| Micro-micro-ohms | .000000000001 | Ohms |
| Milliamperes | .001 | Amperes |
| Millihenries | .001 | Henries |
| Millimhos | .001 | Mhos |
| Millivolts | .001 | Volts |
| Milliwatts | .001 | Watts |
| Ohms | 1,000,000,000,000 | Micro-micro-ohms |
| Ohms | 1,000,000 | Micro-ohms |
| Ohms | 1,000 | Milliohms |
| Volts | 1,000,000 | Microvolts |
| Volts | 1,000 | Millivolts |
| Watts | 1,000,000 | Microwatts |
| Watts | .001 | Kilowatts |

## MACHINE SCREW SIZE CHART

NUMBERED DRILL SIZE AND DECIMAL EQUIVALENTS

| DIAMETER IN MILS | FRACTION | NUMBERED DRILL | SCREW CLEARANCE | SCREW TAP-IRON |
|---|---|---|---|---|
| 031.25 | 1/32 | | | |
| 062.5 | 1/16 | | | |
| 063.5 | | 52 | | |
| 073 | | 49 | | 2-56 |
| 082 | | 45 | | 3-48 |
| 089 | | 43 | 2-56 | |
| 093 | | 42 | | 4-36 & 4-40 |
| 093.75 | 3/32 | | | |
| 099.5 | | 39 | 3-48 | |
| 110 | | 35 | | 6-32 |
| 113 | | 33 | 4-36 & 4-40 | |
| 125 | 1/8 | | | |
| 136 | | 29 | | 8-32 |
| 140 | | 28 | 6-32 | |
| 149.5 | | 25 | | 10-24 |
| 156.25 | 5/32 | | | |
| 159 | | 21 | | 10-32 |
| 166 | | 19 | | 12-20 |
| 169.5 | | 18 | 8-32 | |
| 177 | | 16 | | 12-24 |
| 187.5 | 3/16 | | | |
| 191 | | 11 | 10-24 | |
| 193.5 | | 10 | 10-32 | |
| 209 | | 4 | 12-20 | |
| 213 | | 3 | | 14-24 |
| 218 | 7/32 | | | |
| 221 | | 2 | 12-24 | |
| 250 | 1/4 | | | |
| 281.25 | 9/32 | | | |
| 312.5 | 5/16 | | | |
| 343.75 | 11/32 | | | |
| 375 | 3/8 | | | |
| 406.25 | 13/32 | | | |
| 437.5 | 7/16 | | | |
| 468.75 | 15/32 | | | |
| 500 | 1/2 | | | |
| 531.25 | 17/32 | | | |
| 562.5 | 9/16 | | | |
| 593.75 | 19/32 | | | |
| 625 | 5/8 | | | |
| 656.25 | 21/32 | | | |
| 687.5 | 11/16 | | | |
| 718.75 | 23/32 | | | |
| 750 | 3/4 | | | |
| 812.5 | 13/16 | | | |
| 875 | 7/8 | | | |
| 937.5 | 15/16 | | | |
| 1000 | 1 inch | | | |

(To change mils to decimal fractions of an inch - Move the decimal three digits left.)

## COPPER WIRE TABLE

| B & S AWG SIZE | DIA. OF BARE WIRE IN MILS | DIA. SINGLE FORMVAR* | APPROXIMATE TURNS PER LINEAR INCH** FORMVAR | S.S.C. | S.C.C. | CURRENT CARRYING CAPACITY 1500 CM/AMP | FEET PER POUND | SIZE |
|---|---|---|---|---|---|---|---|---|
| 10 | 101.9 | 105.5 | 8 | | 9.3 | 6.9 | 34.7 | 10 |
| 12 | 80.81 | 082.7 | 10 | | 11.5 | 4.4 | 55.19 | 12 |
| 14 | 64.08 | 065.9 | 13 | | 14.2 | 2.7 | 87.75 | 14 |
| 16 | 50.82 | 052.4 | 17 | 18.9 | 17.9 | 1.7 | 139.5 | 16 |
| 18 | 40.30 | 041.8 | 21 | 23.6 | 22.0 | 1.1 | 221.9 | 18 |
| 20 | 31.96 | 033.4 | 26 | 29.4 | 27.0 | .68 | 352.8 | 20 |
| 22 | 25.35 | 026.6 | 33 | 36.5 | 34.1 | .43 | 560.9 | 22 |
| 24 | 20.10 | 021.3 | 42 | 45.3 | 41.5 | .27 | 891.9 | 24 |
| 26 | 15.94 | 016.9 | 52 | 55.6 | 50.2 | .17 | 1,418 | 26 |
| 28 | 12.64 | 013.5 | 64 | 68.6 | 60.2 | .11 | 2,225 | 28 |
| 30 | 10.03 | 010.9 | 80 | 83.3 | 71.5 | .067 | 3,586 | 30 |
| 32 | 7.95 | 008.8 | 98 | 101 | 83.6 | .042 | 5,701 | 32 |
| 34 | 6.305 | 007.0 | 124 | 120 | 97 | .026 | 9,065 | 34 |
| 36 | 5.00 | 005.6 | 155 | 143 | 111 | .017 | 14,410 | 36 |
| 38 | 3.96 | 004.5 | 193 | 166 | 126 | .010 | 22,920 | 38 |
| 40 | 3.145 | 003.6 | 239 | 194 | 140 | .006 | 36,440 | 40 |

*Formvar and Enamel are approximately the same.
**The apparent discrepancy of formvar is due to manufacturers data - insulation thickness varies with different manufacturers.

# CONSTRUCTION HINTS FOR THE NOVICE

The following sequence for construction and checking Thordarson-Meissner kits and suggested circuits is offered to the hobbyist as it was found practical in beginning radio construction classes. This sequence of construction is applicable to kits and other circuits, to both the beginner or novice and the experienced builder. It is an educational technique and not a manufacturing practice.

---

## FAMILIARIZE YOURSELF WITH THE COMPONENTS

Learn to know the parts by their catalogue names and to identify them by value at a glance. It is always well to know with what you are working. This "thing-a-ma-jig" method doesn't help you visualize your work. A mental picture--spatial relationship-of each components comparative size, structure, construction, function, location of leads, and identification markings are necessary to build with ease. See page 6 for identification.

---

## FAMILIARIZE YOURSELF WITH THE CIRCUITS

Learn to know the total circuits and each circuit of which it is Composed. An easy way to learn the circuits is as follows:

a. Block Diagram the job. Blocks might include Power Supply, Output Stage, Driver Stage, Detector, IF, Mixer, RF, etc.

b. Diagram or trace the filament or heater circuit (which is common to all blocks) placing the tube socket prong numbers in their sequential location. Sequence is particularly important in AC-DC receiver circuits, as hum can be picked up with improper sequence.

c. Diagram or trace the B+ source locating each tapped voltage. Note that B+ comes from the cathode of the rectifier (tube or dry disc.) check the B+ return to the high voltage source. This is usually the grounded center tap of the power transformer.

d. Diagram or trace the parallel circuits from B− to the cathode to each tube and from the plate to the load and thence back to B+. Notice that dropping resistors are by passed for either Audio or R.F. currents and that the output voltage is isolated from and serves as drive for the next stage.

e. Diagram or trace the series parallel circuits from B− to the cathode of each tube and from the screen grid ($G_2$) to B+. Notice that the screen grid current flows through the cathode circuit. This is important to remember when computing a replacement for these parts as well as for power transformers.

f. Diagram or trace the control grid circuits ($G_1$ or $G_3$) from the source of voltage, condenser or coil, to the grid and from the cathode to the grid return resistor or coil.

g. Diagram or trace any other circuits (i.e. suppressor-$G_3$, Anodes, diodes, focusing electrodes, deflecting plates, etc.)

h. Study the pictoral diagram for location of parts and leads. After familiarizing yourself with proper names of components, the schematic diagram, and the pictoral diagram you are ready to mount the parts and wire the circuits, testing as you proceed.

I. Mount the large parts using lockwashers as described in the paragraph on lockwashers. Locate as shown on the pictorial diagram.

II. Wire the power transformer primary or battery connection and the filament or heater circuits.

III. Test the filament or heater circuits by inserting the tubes and seeing if they light.

IV. Remove the tubes and wire the power supply.

V. Plug in the rectifier tube and test the power supply with a D.C. voltmeter. Remember 100 MA through the heart will kill you! To be safe make all connections with the plug out. Using the plug as a switch.

VI. Wire the output stage if it can be tested with a signal input stage.

VII. Test the wiring with a signal or test the wiring with an ohmmeter or voltmeter using the chart supplied with the kit or diagram.

IX. Proceed stage by stage.
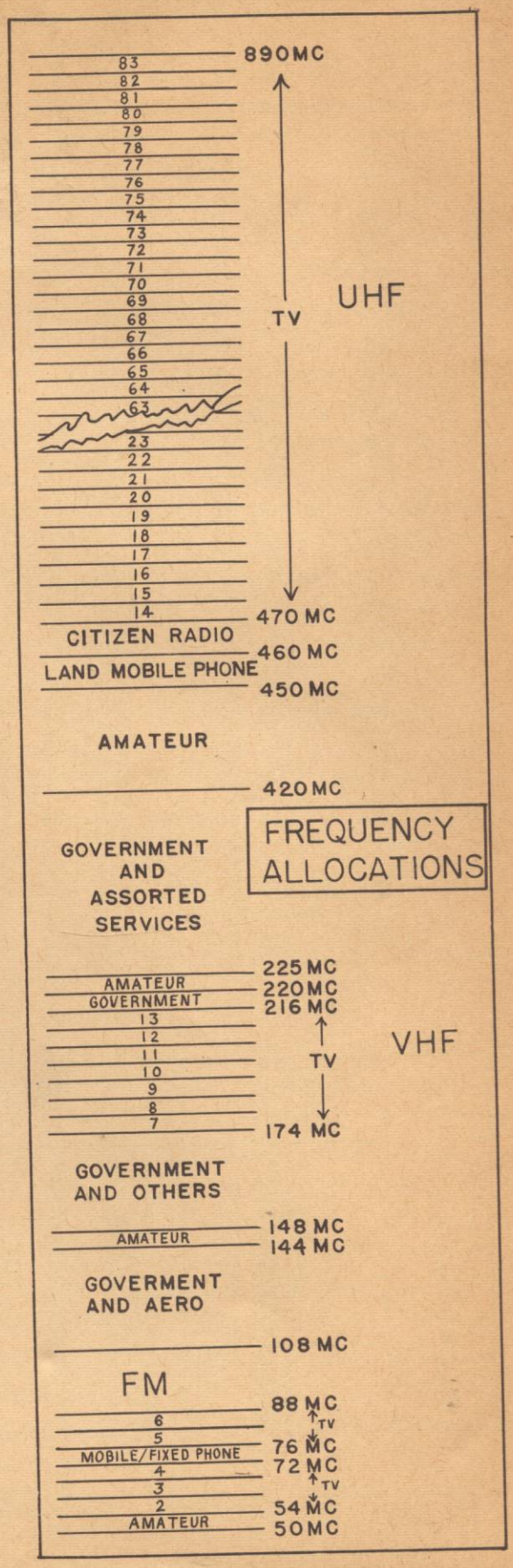
X. Test stage by stage.